Configuration List

Product Manual
IRB 2000

3HAB 0007- 2
January 1993/M93

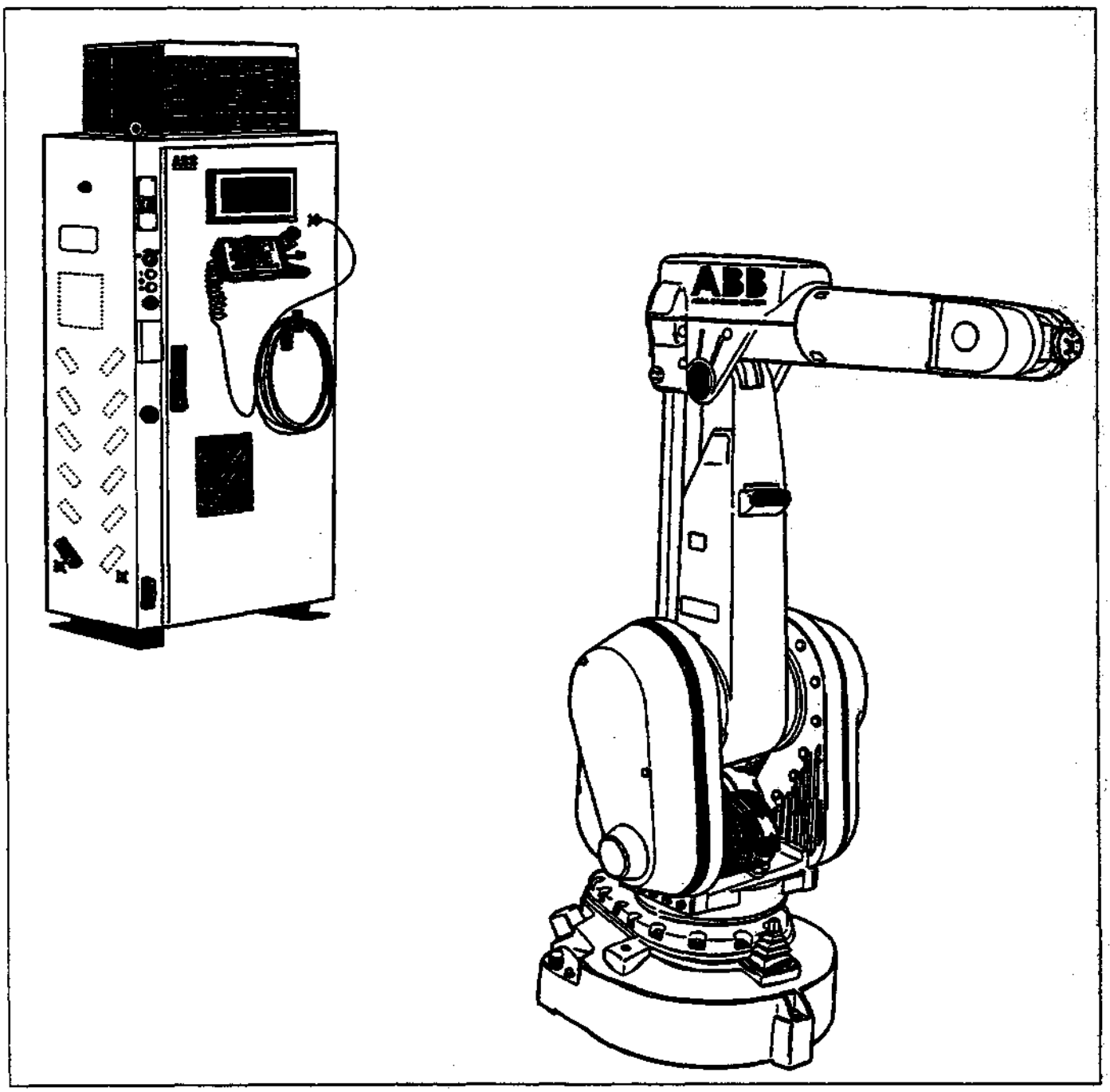

Jk It It

ABB Robotics Products

ASEA BROWN BOVERI

Article number: 3HAB 0007- 2
Issue: January 1993

ABB Robotics Products AB
S-721 68 Västerås
Sweden

ABB Robotics Products AB

Configuration list IRB 2000		**M93**
RAC	RAC Ref. No.	Order No.
Customer		Serial No.

CONTENTS

Specification form IR[redacted]	
Data sheet	
Data sheet	

DOCUMENTATION (70(

DESCRIPTION	IN THIS DELIVERY
Product Manual IRB2	
Service Manual IRB '<	
Service Manual S3	
Programming Manual!	
Computer link docum	

To the User

The Configuration List is an individual specification of the robot system delivered regarding configuration and extent.

On delivery, the complete document is placed in the robot control cabinet.

Till användaren

"Configuration List" är en individueli specifikation av det levererade robotsystemet avseende uppbyggnad och omfattning.

Vid leveransen från ABB Robotics finns det kompletta dokumentet inlagt i styrskåpet.

☐ Tested according to inspection provision 3HAA 3916-B

	Date	Name
Approved		
Approved		
Delivery SEROP		
Delivery		
Installation		

Issued by	Doc. No.	Lang	Rev	Date	Sheet No.
A Broberg/MT	3HAB 0105-2	en	0	9249	1/1

Description
IRB 2000

3HAB 0001-2
January 1993/M93

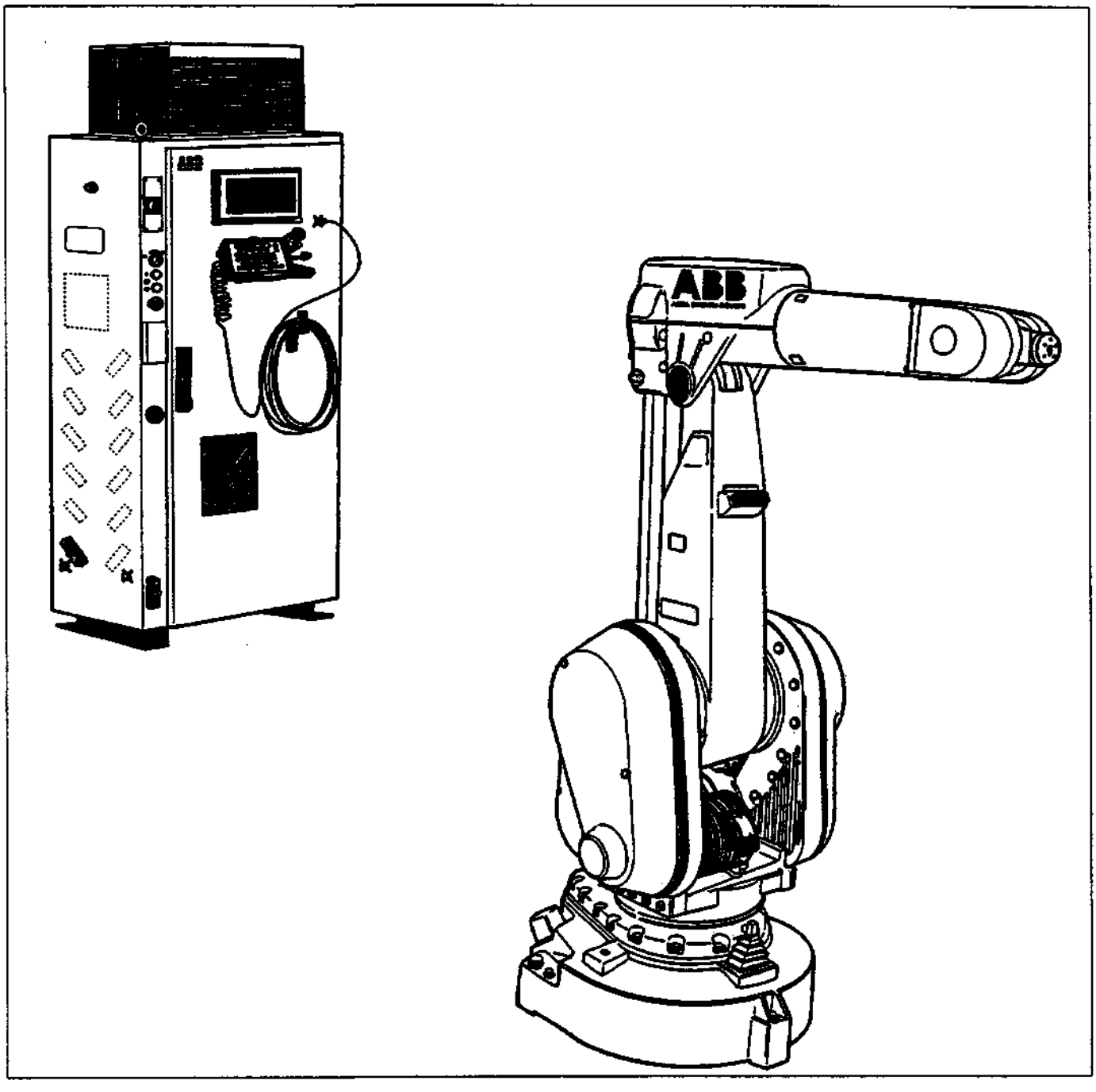

ABB Robotics Products

ASEA BROWN BOVERI

Article number: 3HAB 0001-2
Issue: January 1993

ABB Robotics Products AB
S-721 68 Västerås
Sweden

CONTENTS

1 INTRODUCTION

1KB 2000
is a six-axes robot with a large work volume and is primarily intended for arc welding and glueing/sealing. IRB 2000 is also suitable for applications such as assembly, water jet cutting, laser cutting, material handling and stud welding.

The handling capacity is 10 kg and the very quick movements of the wrist axes are other important features for the intended applications.

To make it possible to adapt the robot to various applications, a range of peripheral equipment for various applications is available. The peripheral equipment range includes tool exchangers, gripper holders and several different gripper units. Power and air supply is available at the grippers.

2 CHARACTERISTICS, IRB 2000

Capabilities
The IRB 2000 handles a load of up to 10 kg within a wide working range, accurately and rapidly. The slendemess and dexterity of its arm system gives high accessability. Its designe permits installation of the same robot on the floor or inverted.
The IRB 2000 robot is particulary sui table for arc welding, glueing and material handling tasks because of its speed, wide working range and the flexibility inherent in its 6-axis design.

Speed
The IRB 2000 robot performs outstandingly, both in acceleration and speed for all axes. In arc welding applications, with many short welds, the higher acceleration can provide shortest possible cycle time.
In machine tending, the workpiece change time can be cut to a minimum.

Process interface
The IRB 2000 is a general purpose robot that can be adapted to various kinds of applications. There are software functions adapted for applications, mounting holes on the arm system for process equipment and user wirings and pressurized air supply routed inside the robot arm.
All these integrated features, when connected to peripheral equipment^ like grippers, tool exchangers, etc.), mean a reliable solution with high productivity.

Reliability and maintenance
High quality characterizes the entire design, e.g. few and rigid moving parts, minimal maintenance, robot wiring routed inside the robot, modular design for fast and simple service and a minimum number of circuit boards, circuitry and components.
These features and many more make the IRB 2000 extremely reliable and ensure a high productivity.

Control system
The S3 Control System makes use of established features like softkeys, joystick and the robot-language ARLA for simple and fast programming. IRB 2000 is in its basic form equipped with an absolute measuring servo system. Another important factor is the interface capacity. The S3-controller has the ability to perform a communication in several different ways. These are digital or analogue I/Os, computer link to a superior controoder available and capability to control up to 6 external axes.

3 DESCRIPTION

The robot consists of a manipulator and a control unit connected by 2 cables.

Various options and variants are available. These are described in detail in chapter 6.

The control unit contains the total system electronics, and offers many opportunities for external communication and control of peripheral equipment.

Operator communication, programming and manual running is performed via a portable programming unit. Programming can also be performed off-line via a terminal and an ABB Robotics Off-line Programming Package.

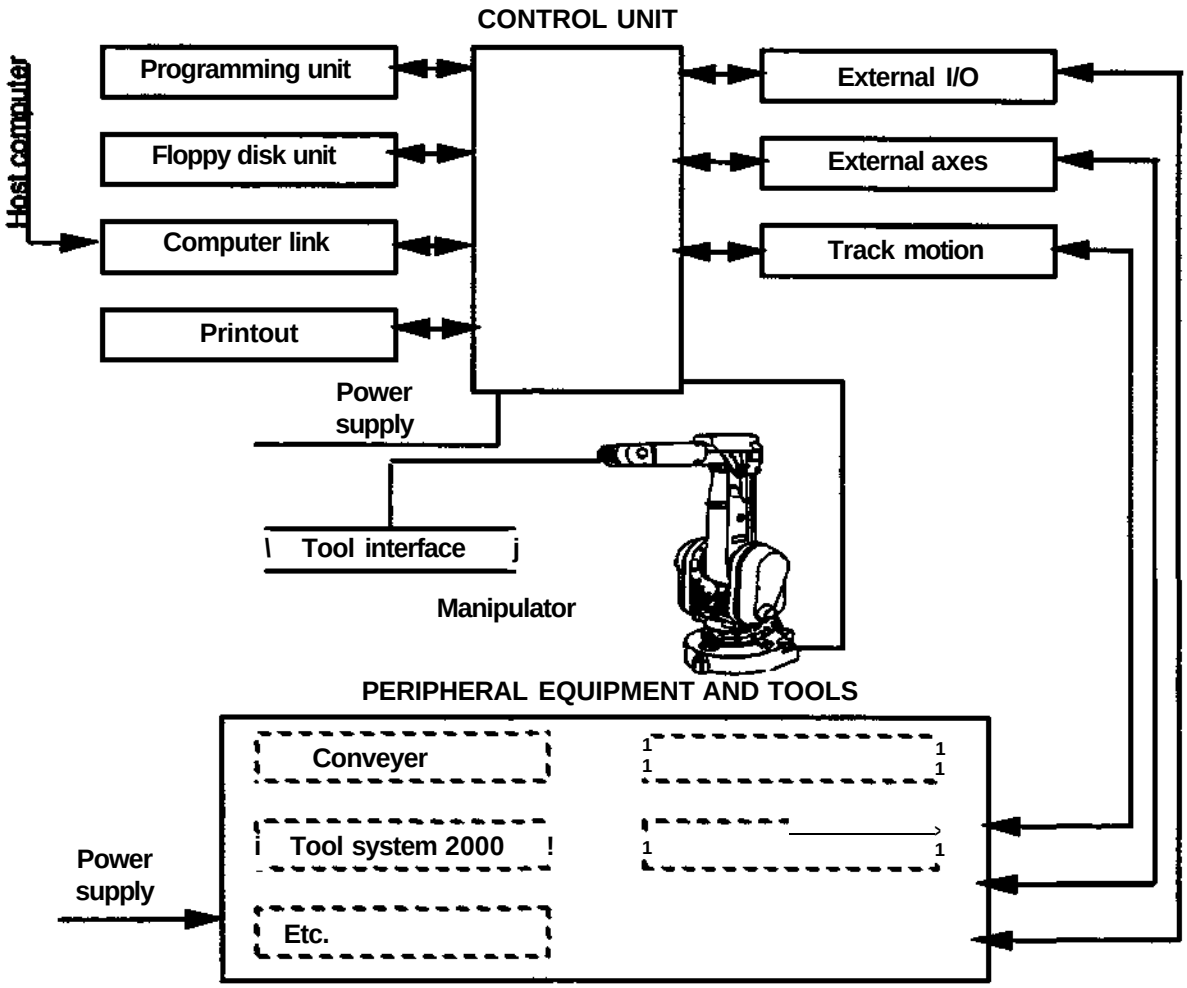

Fig. 3.1 Principle diagram 1KB 2000

3.1 Manipulator

The Manipulator can in one version be used for either floor mounting or inverted sustpension.

Exeptional for this design is:

- small pedestal turning radius
* slender arm system.

Serviceability
Extensive effort has been put into making the robot easily serviceable and therefore fault can be done in minutes by service personnel. Only a few special tools are required.

Drive system
All motors are servo-controlled, brushless AC motors, specially adapted for each axis. Both the motors and the feedback units are maintenance free.

Brakes
The robot is supplied with brakes on all axes. The robot is automatically braked at emergency stops, power failure or when the system is taken down to MOTOR OFF If the robot are in MOTOR ON mode, brakes are activated after 10 seconds (automatic operation) or after 5 minutes (manual operation).

The brakes can, individually, be manually released by switched located on the side of the robot. The brakes require no maintenance.

When the brakes are released, the arm system may collapse! Arm can make a sudden, uncontrolled movement.

Gearboxes
All gearboxes are made with very high accuracy and are specially adapted for each axis function.
All gears are lubricated, with liquid grease and oil.

Cabling
The cabling is highly modularised and therefore easy to replace as complete units. The cables are arranged for maximum life time.

Measurement system and accumulator unit
The measurement system consists of one resolver on each motor shaft and a measurement board mounted on the robot.

The resolver is used for gathering speed and position data.The measurement board reads the resolver feedback signals and generates position information for each axis.

The rechargable battery is used for supply back up to the measurement board during power off. This prevents the data regarding the number of turns each resolver has made to be erased due to power failure. The battery is charged continously at power on.

This means that the robot may be restarted directly from its present position after a system shut down.

Movement structure
The robot's movement pattern can briefly be described as follows (see also the figure below).

Axisl(C)
Turning of the complete mechanical unit arm system.

Axis 2 **(B)**
Forward and reverse movement of the lower arm.

Axis 3 **(A)**
Up and down movement of the upper arm.

Axis 4 (D)
Turning of the complete wrist centre.

Axis 5 (E)
Bending of wrist around the wrist centre.

Axis 6 (P)
Turning of mounting flange (robot turning disc)

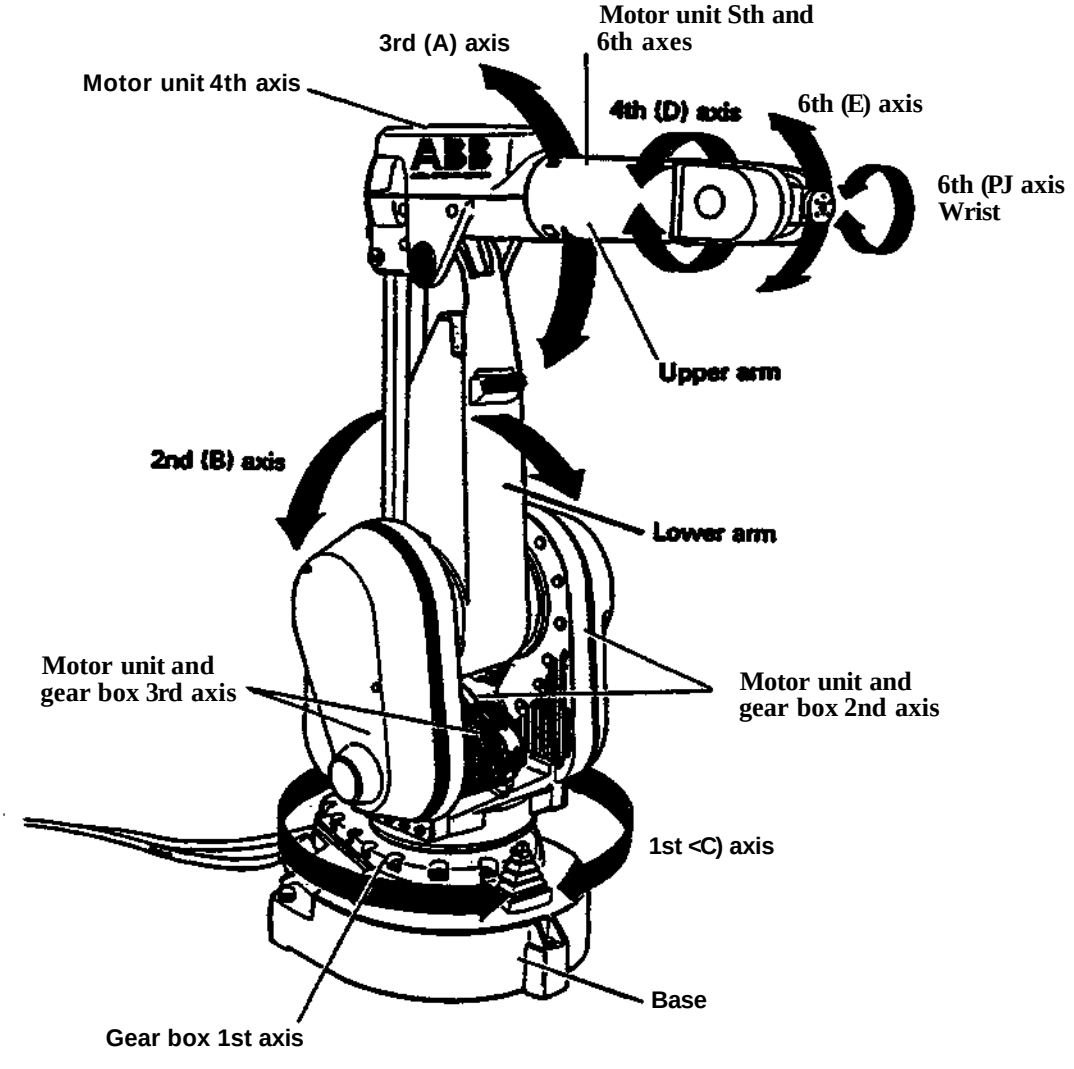

3.2 Control system

Control panel	Main functions for robot operation.
Programming unit	All functions for robot operation and programming. Built-in system test.
Floppy disk unit	Handles storing/loading of data on floppy disk.
Winchester memory (option)	Handles storing/loading of data in a mass memory.
Duty time counter	Recording duty time.
Monitor, LCD (Option)	Additional display of user program and process messages.
Cooling device (option)	Cooling of the electronic.
Connections	Control cable connection, process communication, computer link (option), program printout (option).

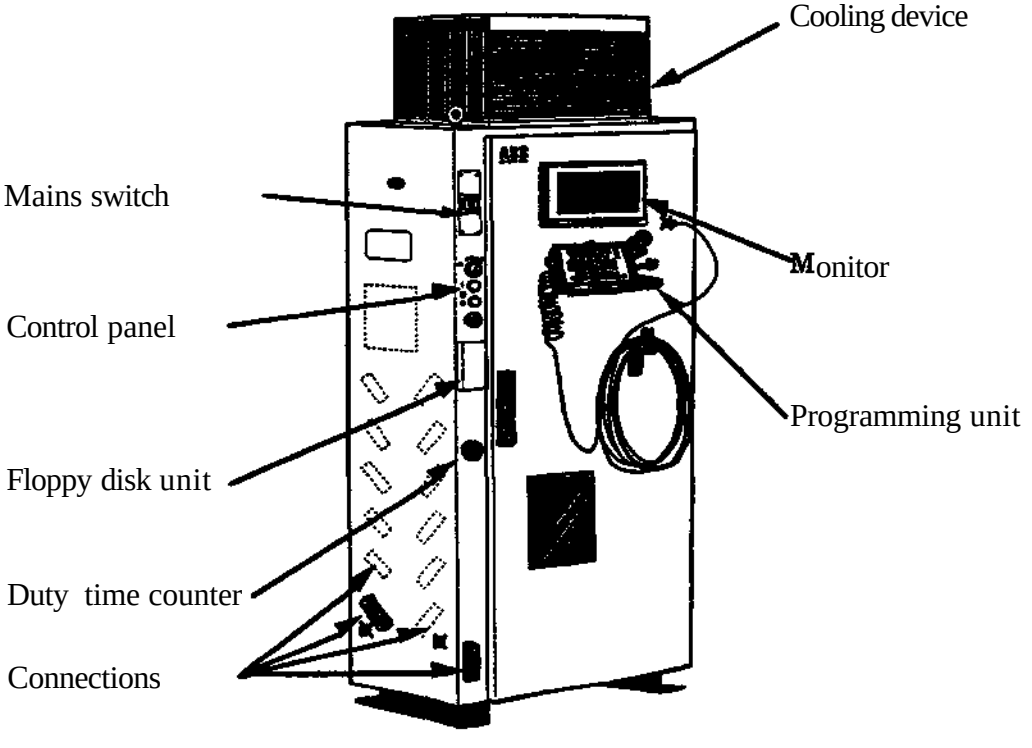

Fig 3.4 Control cabinet

The look of the cabinet differs, depending on design

Eletronic components

Computer board	• Contains four microprocessors: - Main computer - for overall control. - Servo computer - for control of servo functions and robot movements. - Axis computer - for individual control of robot axes. - I/O computer - for control of communication with operator unit, peripheral equipment, host computer (option) and floppy disc unit. • Contains all robot primary memory.
System board	• Contains circuits for personal safety functions - emergency stop; - safe guarded stops; - limit switches; - etc.
Digital I/O boards (option)	Digital process communication.
Analogue I/O boards (option)	Analogue process communication.
Power unit	Contactors for power to the rectifier for the drive units and power for the brakes.
Rectifier	Voltage supply to drive units.
Supply unit	Stabilized voltage supply to all electronics, and I/O and brakes.
Drive units	Power amplification for control of motor torque. One axis per drive unit. (Up to 7 units incl. one integrated axis.)
Control board for external axis (option).	Speed reference signals and connetion of resolvers for 1-6 external axes.
Mains transformer	

Process connections (option)

The system can handle the following input and output signals from the peripheral equipment:

- **Digital I/O**
  - up to 96 inputs and 96 outputs
    Requires 1-6 digital I/O boards (option)

- **Analogue I/O**
  - up to 4 inputs and 4 outputs
    Requires 1 analogue I/O board (option)
- **Combi I/O**
  - 16 digital in- and 16 outputs + 2 analogue outputs
    Requires 1 AD combi I/O board (option)
- **Computer communication** via RS 232 interface.
  Requires "Computer link" (option).
- **I/O remote bus** for Allen Bradly 1771 RIO link, up to 128 in / 128 out (option)
- **Control signals** for 1-6 external axes.
  Requires one extra board (option).

Drive system

The drive system, for the robot motors and one integrated axis 7 (option), consists of the following units.

• Computer board	-	for overall control.
• Rectifier unit	-	for power supply to the drive units.
• Drive unit	-	receives current references from the computer board. The current references control the power amplifier supplying current to the motor.
• Serial measument board	-	reads the resolver

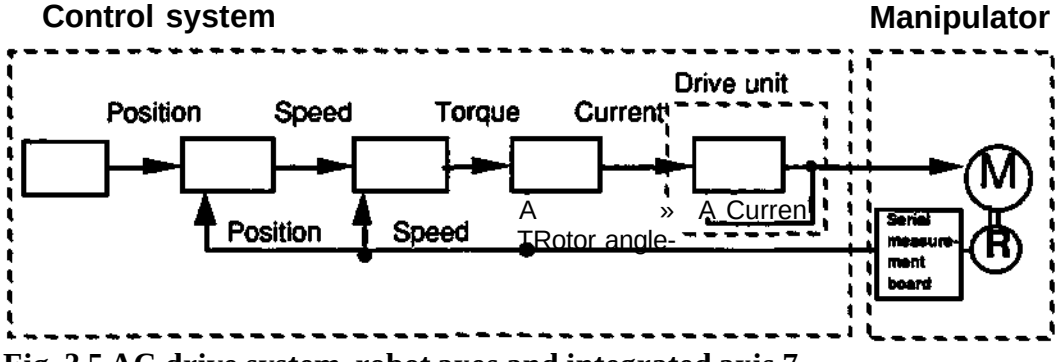

Fig. 3.5 AC drive system, robot axes and integrated axis 7.

Drive unit for optional external axes is located outside the control system.

Thesedrive units are provided with speed referense by the control system.

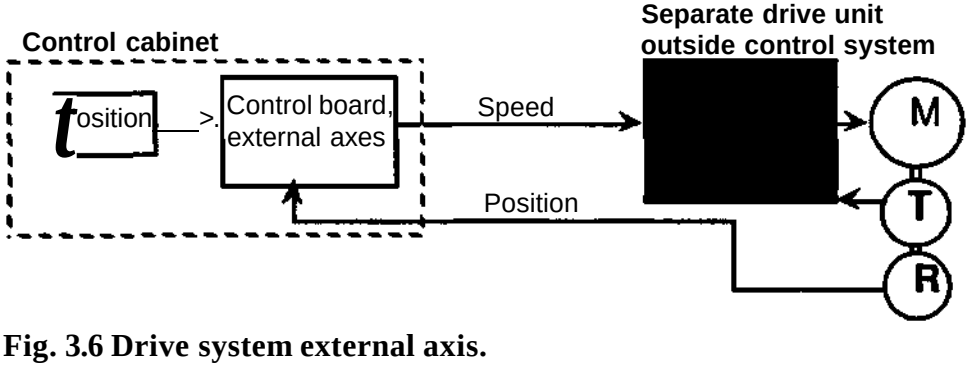

Fig. 3.6 Drive system external axis.

Diagnostics

The control system is provided with its own built-in diagnostics with the following characteristics:

- Test on start-up:
  - computer board;
  - programming unit;
  - monitor (option);
  - voltage supply unit;
  - rectifier unit.
  - location control of I/O boards and drive units

- During test running, a red LED on the computer board will switch from a continuous light to a flashing light.

- Successful test running indicated by:
  - no red LEDs on all units;
  - a green LED lights up on the computer board.

- Unsuccessful test running indicated by:
  - a red LED lights up on the faulty board;
  - if possible, a fault message appears on the programming unit and on the monitor (if installed).

- Running of the control system in a special test mode during service, with the following functions:
  - start-up test;
  - full test of the I/O boards, jumpers included;
  - test running of the drive units at full voltage;
  - program for cleaning the floppy disk unit read/write heads.

4 OPERATION/PROGRAMMING

4.1 Control panel

Using the control panel, operating modes can be selected and the robot can be switched to MOTOR ON or MOTOR OFF. Lamps inside the buttons indicate status and any malfunction. The control panel also includes one of the emergency stop buttons.

Lockable switch for selection of operation mode:

1

AUTO		Program run at maximum speed. Program edit and joystick run is not allowed.
MANUAL REDUCED SPEED	**<250** mm/8	Programming and program running with maximum speed 250 mm/s.
MANUAL FULL SPEED	**100** %	Test run at maximum speed.

H]

MOTOR ON mode pushbutton.
MOTOR ON mode is indicated by light inside the button. Indication "External axis not synchronized" by means of a twinkling MOTOR OFF light. The robot motors are activated in the MOTOR ON mode.

3

MOTOR OFF mode pushbutton.
MOTOR OFF mode is indicated by light inside the button. Indication "ERROR" by means of a twinkling MOTOR OFF light.
The system is activated in the MOTOR OFF mode but not the robot motors.

4

Emergency stop button.

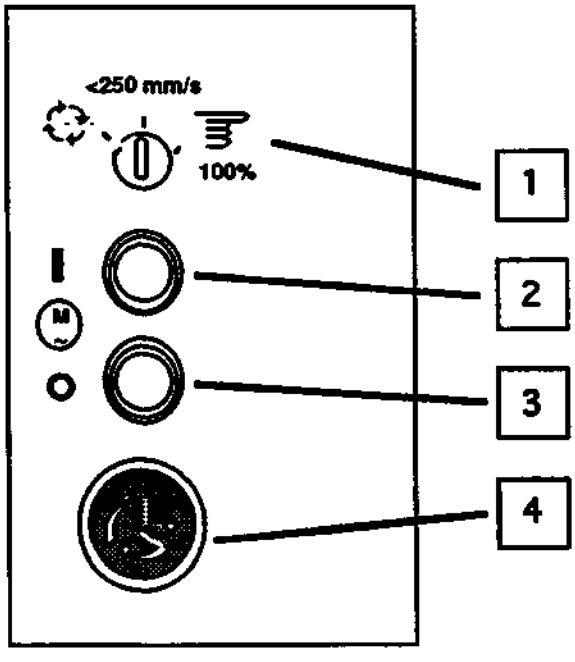

Fig4.1 Control panel

4.1.1 Remote control

- By using the first 8 inputs and outputs on any I/O board the following functions can be remotely controlled:

	Control (input)	Indication (output)
MOTOR ON	X	X
MOTOR OFF	X	X
Program start	X	X
Program stop	X	X
Synchronization	X	X
From disc	X	X
Lamp test	X	
Prog, unit lock	X	
Error		X
Emergency stop		X

4.2 Programming unit

The programming unit (Fig. 4.2) is connected to the control system by a 10 m cable (extension cable 10 m, total 30 m, option). When not in use, it is placed on a consol on the door of the control system.

The programming unit is provided with LED displays and membrane buttons with tactile feedback. The enabling device is located under the emergency stop button. The enabling device allows the operator to switch between MOTOR ON and MOTOR OFF when the operating mode selector is in one of the MANUAL positions.

All operator communications, except selection of the operational mode for the robot, are available on the portable programming unit. The programming unit is provided with the following facilities for this purpose:

- **An illuminated two-row alphanumeric display for messages in plain language.**
  The system can display:
  - texts in any of 10 languages: English, German, French, Dutch, Italian, Spanish, Portuguese, Japanese(Katakana) Finnish and Swedish;
  - numerical values in metric or imperial.

- **Five multi-function buttons below the panel.**
  The text on the lower row of the display defines the use of the multi-function buttons.

- **Six to eight menus for most of the system functions.**
  Each menu contains a particular type of function, e.g. program editing.

- **Joystick**
  The robot and the external axis are positioned using the joystick, together with the safety pad and the switches in the upper right-hand corner.

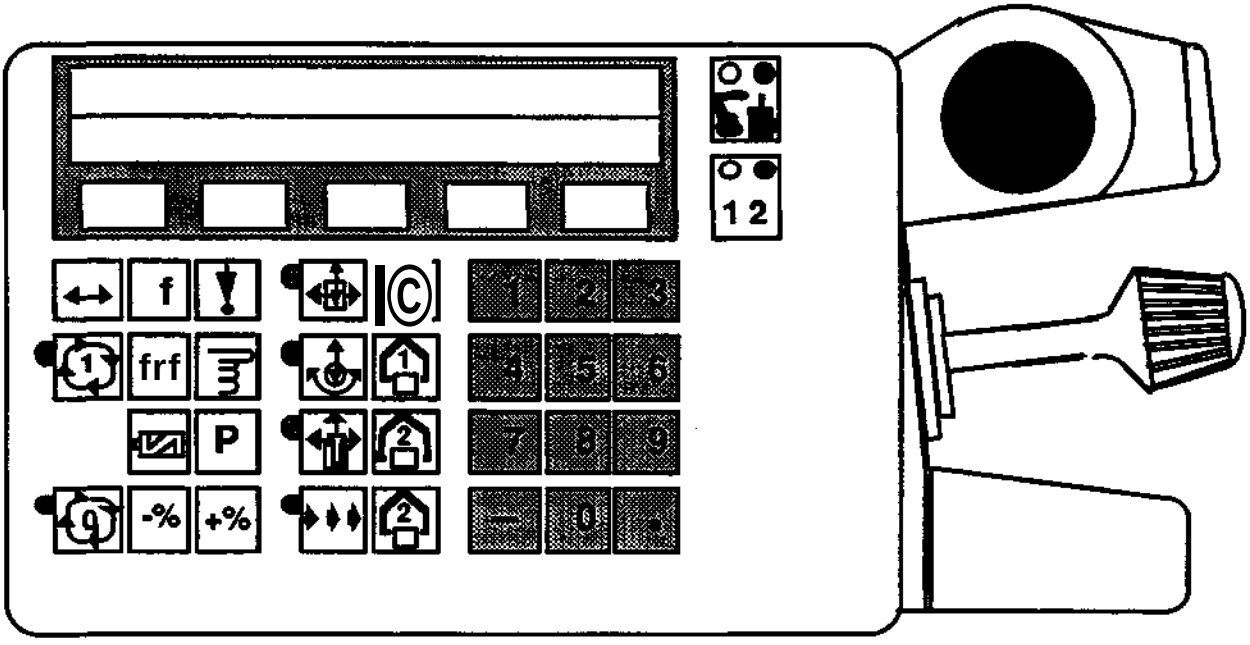

Fig 4.2 Programming unit

4.3 Programming

4.3.1 Program design

The user memory can contain programs numbered from 0 to 9999. The programs in the user memory together form a program block. The size of each program can be adapted as required, provided that the total quantity of programs fit into the user memory. The programmer has considerable freedom when designing a program structure - frequently repeated operations, variants of operations and fault routines, etc. are in separate programs.

Program changes can be effected according to two different principles:

- Within the memory by calling up a program. Calling-up in its simplest form involves:
  1. Interrupting the running of the current program;
  2. Running a different program;
  3. Resuming the running of the current program.

A program which has been called up can in turn call up a third program, etc. up to 10 sub-levels

- The built-in floppy disk unit offers two possibilities:

- Replacement of the whole program block. **All programs** in the primary memory are replaced by a new block of programs downloaded from the floppy disk. After downloading a new program block, the newly loaded block of programs starts running with program 0.

- Erasure of some programs and addition of a (short) program block. **A desired number of programs** in the primary memory are replaced by a down-loaded block of programs. After downloading a new program block, the current program block continues running in the primary memory. Some of the old programs are retained.

4.3.2 Movements

The operator programs a pattern of movements as a number of subsidiary movements between required positions (point-to-point programming). Each position is programmed by the operator moving the robot to the desired position manually. A specific point, known as the work point or the Tool Centre Point **(TCP)** moves relative to the robot in a well defined manner. The TCP can be defined in any selected position and the system can store a number of different TCPs in its memory.

The operator performs manual operation by using a joystick with three degrees of freedom. The speed depends on the joystick deflection.

Manual operation

During manual operation the robot axes are able to move in the following coordinate systems:

- **Rectangular base-oriented coordinate system** (fixed coordinate system)

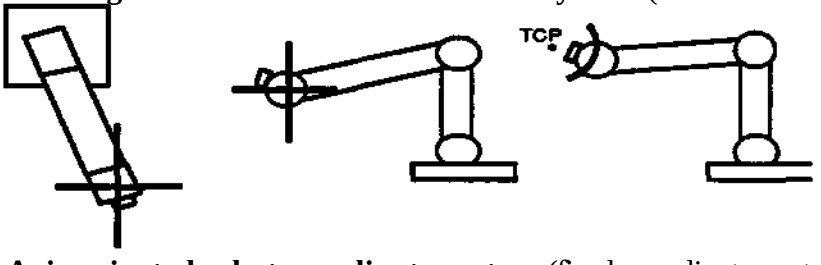

- **Axis-oriented robot coordinate system** (fixed coordinate system)

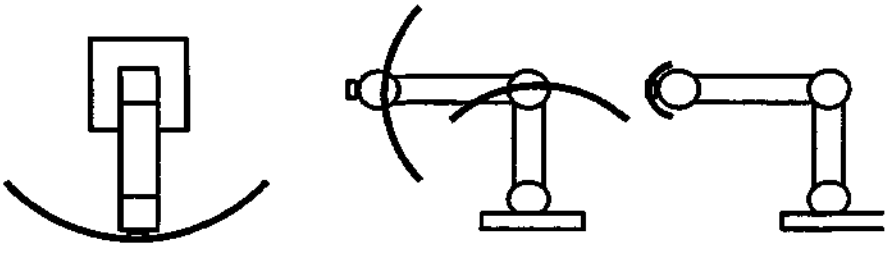

- **Rectangular wrist-oriented coordinate system** (moving coordinate system)

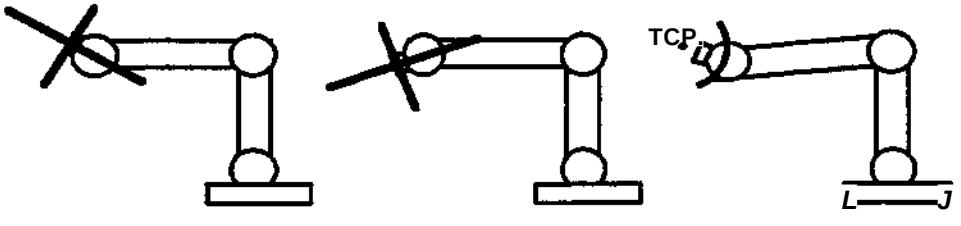

- **Rectangular tool-oriented coordinate system** (moving coordinate system)

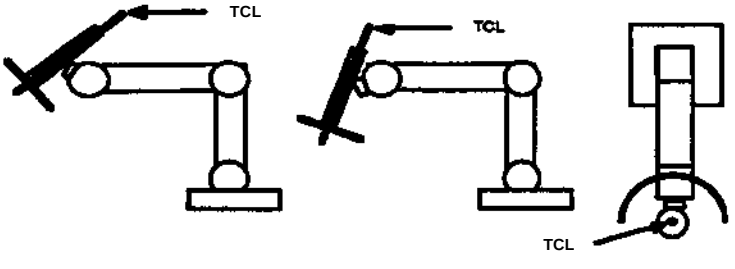

A Tool Centre Line **(TCL)** can be created by defining a base point (BASEP) together with the TCP in the wrist-oriented coordinate system. The TCL then constitutes the x-axis in a **tool-oriented** coordinate system. The TCL is mainly based on the orientation of a tool or a gripper relative to the turn plate and enables a gripper or a tool to be moved parallel to its own configuration.

- Fixed TCP (see Programming manual S3 art. no. 3HAB 0002-2).
  The function makes the manual operation of the robot, when the robot holds the workpiece and the tool is fixed mounted in the room. At reorientation of the workpiece the movement is done in relation to the fixed TCP-point, un-depended of the position of the robot.

Automatic operation

When the system is operating automatically, the robot will move from its current position to a programmed position.

Each position is stored in the memory as the position of the TCP together with either:

- the wrist orientation (wrist-oriented coordinate system) or,
- the tool orientation (tool-oriented coordinate system).

Three different types of automatic running are available:

- **Robot coordinate movement.**
  All axes are individually moved at constant speed towards the programmed position. All axes reach their respective end position simultaneously.

- **Straight-line movement.**
  The TCP/TCL is moved straight and at constant speed towards a programmed position. Any reorientation of the wrist or the TCL will be performed continuously during the movement.

- **Modified straight-line movement.**
  Straight-line movement of TCP but "Robot coordinate" movement of wrist axes.

The system speed is determined by:

- an absolute speed in mm/s or inches/s for the current section of the program;
- a percentage of the absolute speed for each movement instruction;
- an adjustment factor as a percentage of the speed determined by the above points.

4.3.3 Programmable functions

Position programming instructions

- **General parameter:**
  - Position accuracy;
  - Speed, as a percentage of defined absolute speed.
- **Supplementary parameter:**
  - A position brought:
    - directly from a position register;
    - indirectly from a position register via an address in a numerical register.
  - Position offset value:
    - stored directly in an instruction;
    - brought from a numerical register.
  - Duration, speed replaced by movement time;
  - Circular movement.
  - Continuous rotating external axes.
- **Auxiliary functions:**
  (validity within definable program sections)
  - Choice of:
    - coordinate system;
    - TCP values
    - absolute speed.
  - Displacement:
    - translation of a movement pattern by a reference point;
    - translation and rotation of a program by a reference frame;
- **Optional functions:** (see chapter 6)
  - Material- handling/Assembly/Gluing/Spot welding
  - Arc welding
- **Adaptive control**
  The robot system can be controlled by sensors mounted on the robot or on the object. The robot system can store signal data for a maximum of 16 sensors, and a maximum of three of the 16 sensors can be used during programmed running of an instruction. The robot system can receive the following types of signals from the sensors:

  - Digital 24 V signals at ordinary digital inputs.
  - Three digital +24 V signals at the safety board.
  - An analogue signal of 0- ± 10V at an analogue input.

The various programmable functions are:

- Search:
  The robot will serach for an object as it moves towards a programmed position. The search is successful when *one* of the sensors has found the object.T he result of a search can be used as:
  - a parameter for conditional jumps in the program.
  - reference for program displacement.

- Speed control:
  A sensor controls the speed during movement towards a programmed position.
- Contour following
  Sensor signals control the course of the robot during movement towards a programmed position.

NOTE!
To enable use of the adaptive functions, they must be supplmented by sensors.

- **Palletizing function (if option 481, MH/GL/SW is selected)**
  The positions of all parts on a pallet can quickly be defined by feeding in the positions of the parts at three corner points and the number of columns and lines. The plane can have any slope.

- **Relative tool displacement (if option 481, MH/GL/SW is selected)**
  Execution of movement or rotation in tool-oriented coordinates.
  The arguments are set during programming or brought up from a numerical register during programmed running.

- **Glue and Air flow (if option 481, MH/GL/SW is selected)**
  Glue and Air flow reference signals are put out on two analog outputs at the same time as the robot is positioned. Due to the lag in the robot movemnt and the delay in the gluing equipment, there is also a delay function which enables compensation during execution. Furthermore, it is possible to choose wheter or not the Glue or Air Flow should be proportional to the TCP velocity.

- **Soft servo (if option 481, MH/GL/SW is selected)**
  A function giving the robot a compliance individually controllable for each axis. The force towards the programmed position is proportional to the deviation. Soft servo is defined individually for each axis. To obtain a "softness" in a certain direction (e.g. the Z-direction), the position of the robot arm must be such that the movemnt direction of the axis concerned coincides with the direction of the softness. See figure below.

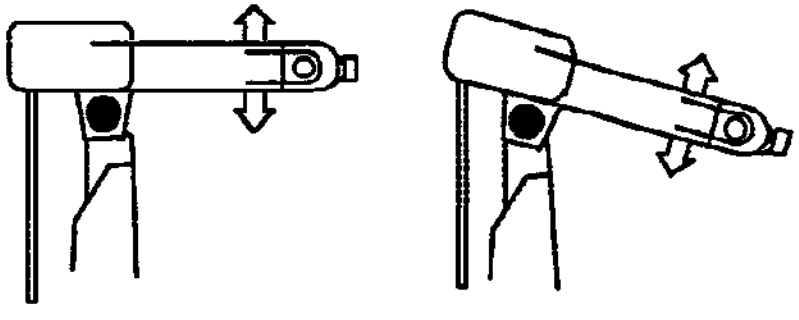

Figure. The direction of the "softness" of axis 3 at different robot arm positions.
Control and logical functions

- **In-pos check (if option 481, MH/GL/SW is selected)**
  Used together with soft servo. A conditional jump may be performed as a result of a permitted deviation from the programmed position.

- **SWI (if option 481, MH/GL/SW is selected)**
  SWI (Spot Welding Interface) is a soft ware function for control of an external welding timer. The SWI-instruction contains weld program number and if required, a register for the opening time of the gun. It is not necessary to have special subprograms, which makes it very easy to program the robot and optimise the program. Further information is given in chapter 12 in the "Programming Manual S3", art.no. 3HAB 0002-2.

Arc weld - AW (if option 482, MH/GL/SW is selected)

- Positioning forward to the point for weld data change and call of data for the weld start procedure and/or weld procedure is programmed with the **WELD-instruction.**
- Positioning forward to the point for weld end and call of data for the weld and procedure are programmed with the **WEND-instruction.**
- A positioning and call of a robot subprogram which is to contain instructions for the pattern cleaning procedure are programmed with the **CLEAN-instruction.**

All of the necessary welding data is managed by the robot system.

The welding data has been separated into the following categories to make the system flexible and easily handled.

- START DATA
- MAIN DATA
- END DATA
- WEAVE DATA
- SENSOR DATA

Ten optional data fields can be defined simultaneously for each of these types.

- The system is provided with integrated supervision of **current, gas flow** and **water cooling.** The welding equipment is assumed to be provided with sensors which give status information to the robot system via inputs reserved for this purpose.

  - Control of external positioner
    With an Arc weld robot non-servo positioners can be run through ports 70 and 80. This is carried out through a digital communication sequence in two steps.
  - Control of two positioners with a common drive unit.
    With a Arc weld robot several servo driven external axes can be connected to a common drive unit.
  - Arc weld instruction with integrated contour following.
  - Weaving patterns are zig-zag, V-shaped, triangular and wrist weaving.

Control and logical functions

- **Program handling:**
- Call for subprograms:
  - direct call;
  - indirect call via numerical registers.
- Return
- Program loading from floppy disk:
  - replacement of complete program block;
  - addition/replacement of program sections.
- Request for superior computer control.

- **Program execution:**
  - **Pause in program running, defined by:**
    - **time;**
    - **input conditions.**
  - **Jump in a program:**
    - **unconditional;**
    - **conditional;**
    - **search stop condition.**
  - **Program stop.**

- **I/O handling (option):**
  - **Setting of digital outputs;**
  - **Enabling/disabling of direct acting inputs (system I/O);**
  - **Transmission of numerical values between I/O and numerical registers.**

- **Register handling:**
  - **Storage in numerical registers of:**
    - **numerical values**
    - **positioning offset values**
    - **current location (x,y,z values).**
  - **Processing of values stored in numerical registers by use of the four rules of arithmetic;**
  - **Storage of TCP location and wrist orientation.**

- **Other instructions:**
  - **Comments:**
    - **explaining program codes;**
    - **displaying execution status on the monitor (option);**
    - **explaining program stops.**
  - **Gripper control.**

4.3.4 Editing functions

- **Changing of:**
  - **Instruction**
  - **Position:**
    - **by running the robot;**
    - **by entering the value.**
  - **Position of external axes**
  - **Arguments in positioning instruction.**

- **Searching for program or instruction by:**
  - **Entering number;**
  - **Indexing forwards or backwards within the program;**
  - **listing of program numbers used;**
  - **listing of call-up sequence to the program active.**

- **Insertion of new instructions.**

- **Re-numbering of instruction numbers in even tens.**

- **Erasing of:**
  - **Programs;**
  - **Instructions.**

- **Copying of:**
  - **Programs;**
  - **Instructions.**

- **Mirroring of a program.**

4.3.5 Manually controlled functions

Function test running program

- Running:
  - Continuously forwards in the program;
  - In steps forwards in the program;
  - In steps backwards in the program.

- Automatic restart after voltage failure.

- Simulation of:
  - 'All conditions satisfied' - to end a pause in running the program;
  - 'All conditions satisfied' - for jumping within the program.

- Displacement of position.

Manual operation of the system

- Clearing of program blocks so that:
  - The first instruction in program 0 is displayed;
  - All registers and outputs are cleared.

- Program displacement in three dimensions with reference frame

- Use of floppy disks:
  - Transfer of an entire program block within the memory;
  - Addition of an entire program block to the program blocks in the memory;
  - Addition of a single program to the program blocks in the memory;
  - Storage of an entire program block;
  - Initiating of floppy disk - erasing of an old floppy disk;
  - Loading and storing of back-up stored system parameters.
  - Erasing of block on floppy disk
- Superior computer control (option):
  - Selection of running mode in relation to a superior computer (control from computer or robot);
  - Storing of a program block in the computer;
  - Storing of a single program in the computer;
  - Loading of a program block from the computer;
  - Loading of a single program from the computer;
  - Storing of back-up stored system parameters in the computer;
  - Loading of back-up stored system parameters from the computer.
- Handling of:
  - Digital inputs. Checking of status;
  - Digital outputs. Checking of status - with possibility of changing status;
  - Numerical register. Checking of value - with possibility of changing value.

- TCP handling:
  - Change or definition of the wrist- or tool-oriented coordinates for the TCP;
  - Direct-acting definition of the TCP;
  - Erasure of TCP.

- Alignment of the tool: (not AW)
  - With one of the rectangular base coordinate axes;
  - With a previously stored orientation.

- Use of system data (system parameters)
  - Check on or change of a separate parameter value;
  - Loading of predefined parameter values;
  - Loading and storing of back-up stored parameter values.

- Choice of language for information displayed on the programming unit panel.

- Listing of (option):
  - Messages from the fault buffer;
  - Single programs.
  - System parameters.

- A system for off-line programming (option):
  - Definition of positions;
  - Storage of positions in a superior computer.

4.3.6 System parameters

System parameters are a collection of data which allow the user to extensively adapt the robot system characteristics. Diskette included in delivery. To prevent loss of data, the parameters can be stored as back-up copies:

- on floppy disk;
- in a superior computer (option).

The robot system also contains a default set of the system parameters, stored in PROM. These parameters allow the system to be operative before the installation adaption commences.

A number of the characteristics, definable in the system parameters, are:

- Movement optimizing

- AC drive units (robot axes and integrated axis 7):
  - resolver offset in the calibration position;

- Robot axes:

  - working range.

- External axis.

- Metric units or inches.

- I/O board organization. (System I/O, SWI, Remote control, Grippers etc.)

- Automatic restart.

- Connection of:
  - superior computer; (option)
  - printer (option);
  - monitor (option).
- Adaption of robot performance to different loads.

5 TECHNICAL SPECIFICATION

5.1 Features

All data is valid for IRB 2000 independent of whether the robot is installed standing up or in an inverted position.

5.1.1 Performance

Type of movementCsee chapter 3)	Working range	Max. speed
Axis 1 (C) Rotation movement	+ 179,9° - -179,9°	1157sec
Axis 2 (B) Arm movement	+ 100° - -110°	1157sec
Axis 3 (A) Arm movement	+ 60° - -60°	1157sec
Axis 4 (D) Wrist movement	+ 200° - -200°	2807sec
Axis 5 (E) Bend movement	+ 120° - - 120°	3007sec
Axis 6 (P) Turn movement	+ 300° - -300°	3007sec

Handling capacity

Maximum load	10 kg

Permitted load depending on distance from wrist, see the load diagram, section 5.1.7.

Position resolution	0.125 mm
Repeatability (at mounting flange)	<± 0.1 mm

5.1.2 Program capacity

Number of programs	
Main program (number 0)	1
Sub-programs (number definable)	1 - 9999
Program memory	
Capacity	32 kword (64 kbyte)
Number of positions (without supplementary information):	
1-6 axes	max. 2 500
7-9 axes	max. 1500
10-12 axes	max. 1000
TCP/TCL positioner	
Number of:	
Ordinary	0-19
Fixed TCP	20 - 29
Definition range (from mounting flange)	0 -1700 mm
Position register	
Number of:	200 (no. 0 -199)
Numerical register	
Number of:	120 (Nos. 0-119)
Premissible values	0 - ± 32 767 (16 bits)

5.1.3 Battery capacity

Computer board	
Back-up capacity	aprox. 50000 hours
Battery, type	3.6 V lithium
Battery expected life-time	5 years (if environment temp <35° C)
Serial measurement board	
Battery capacity	1000hrs(4Ah)
Expected life-time	5 years (<50°C)
Recharging time	18 hours
Diskette capacity	7 x 32 kword (448 kbyte)
Winchester capacity (option)	250 x 32 kword

5.1.4 Signal capacity

External I/O connection		
Digital	0-96 inputs / 0-96 outputs	
Analogue	0-4 inputs / 0-4 outputs	
Signal connections, on robot arm		
Signals	24	50 V, 250 mA
Power	6	250 V, 2 A
Grounding	1	
Air (connections foot R3/8 "inner, arm Rl/4* inner)	1	Max 8 bar, inner diameter 6mm

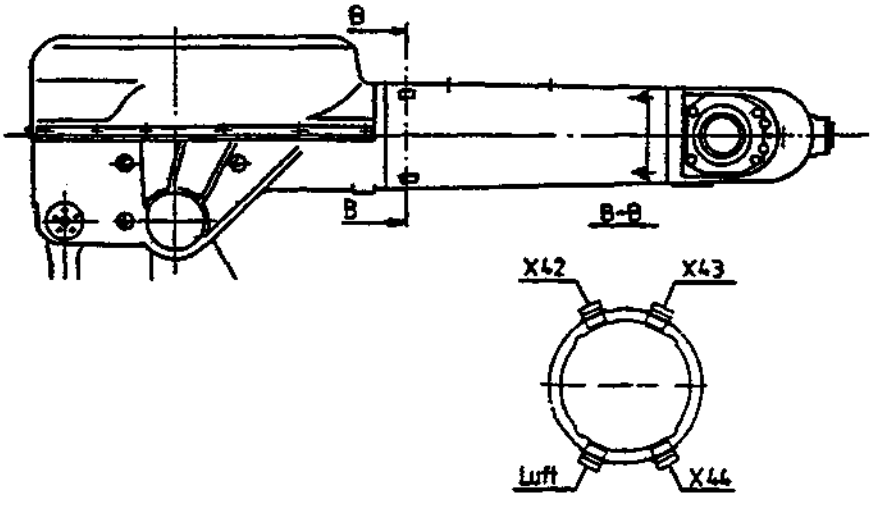

Fig 5.1 Signal capacity

5.1.5 Man - machine communication

Programming method	Point to point method by: • interactive dialogue • manual running by joystick. • off-line programming via terminal

Number of menus	6 standard menus
Aids for dialogue	
Messages from the system	Plain language
Choice of language for messages	English, + 9 selectable
Display in programming unit	Alphanumeric, 2 rows
Number of characters per row	40
Aids for data entry	Numerical key pad + 5 multi-function keys

5.15 Workingrange

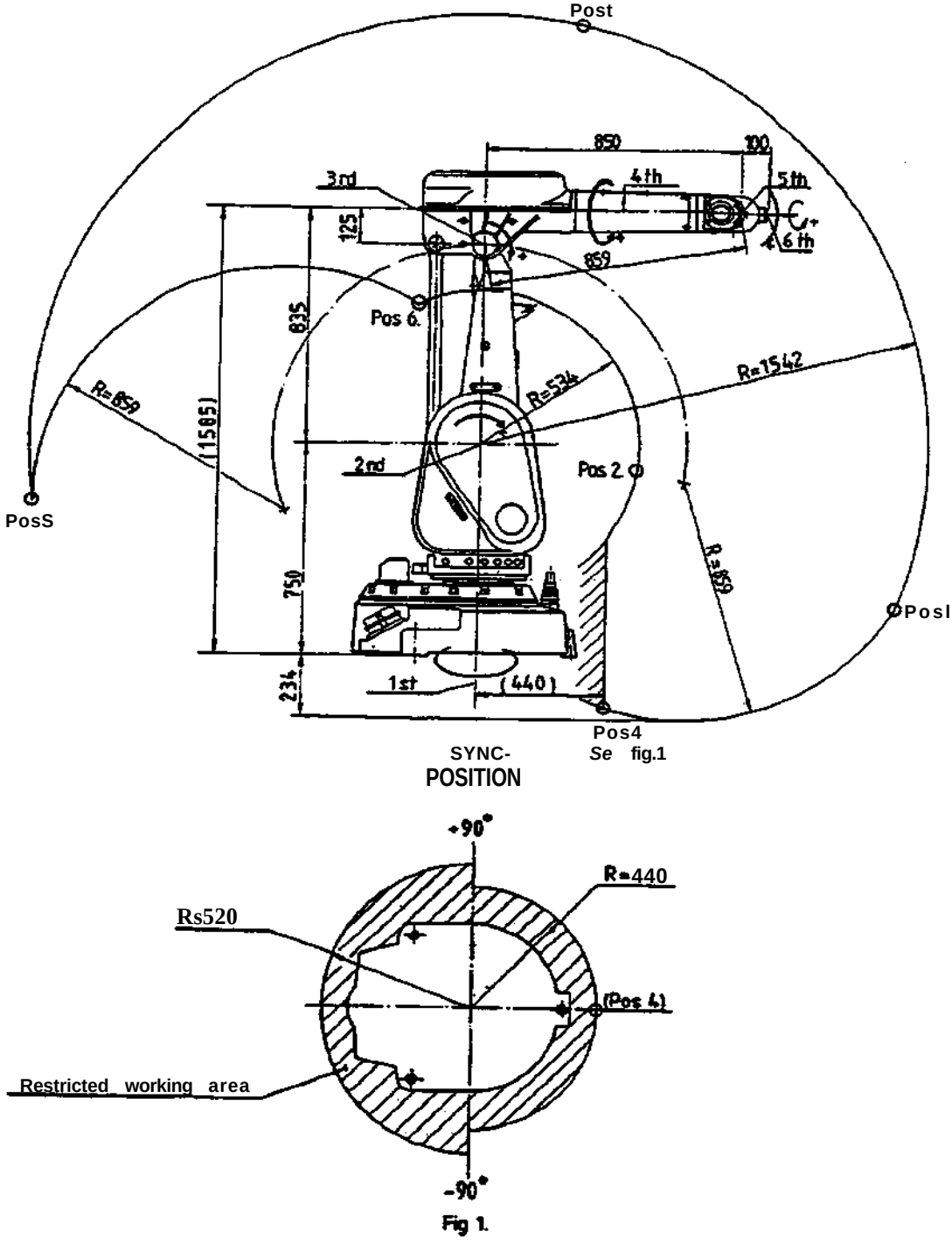

Fig 5.2 Mazimum reach. All dimensions in millimetres. The restricted working area around the robot base is not limited by hardware of software, but must be used since there is a risk of hitting the robot base. The radius are measured to the centre line of axis 5.

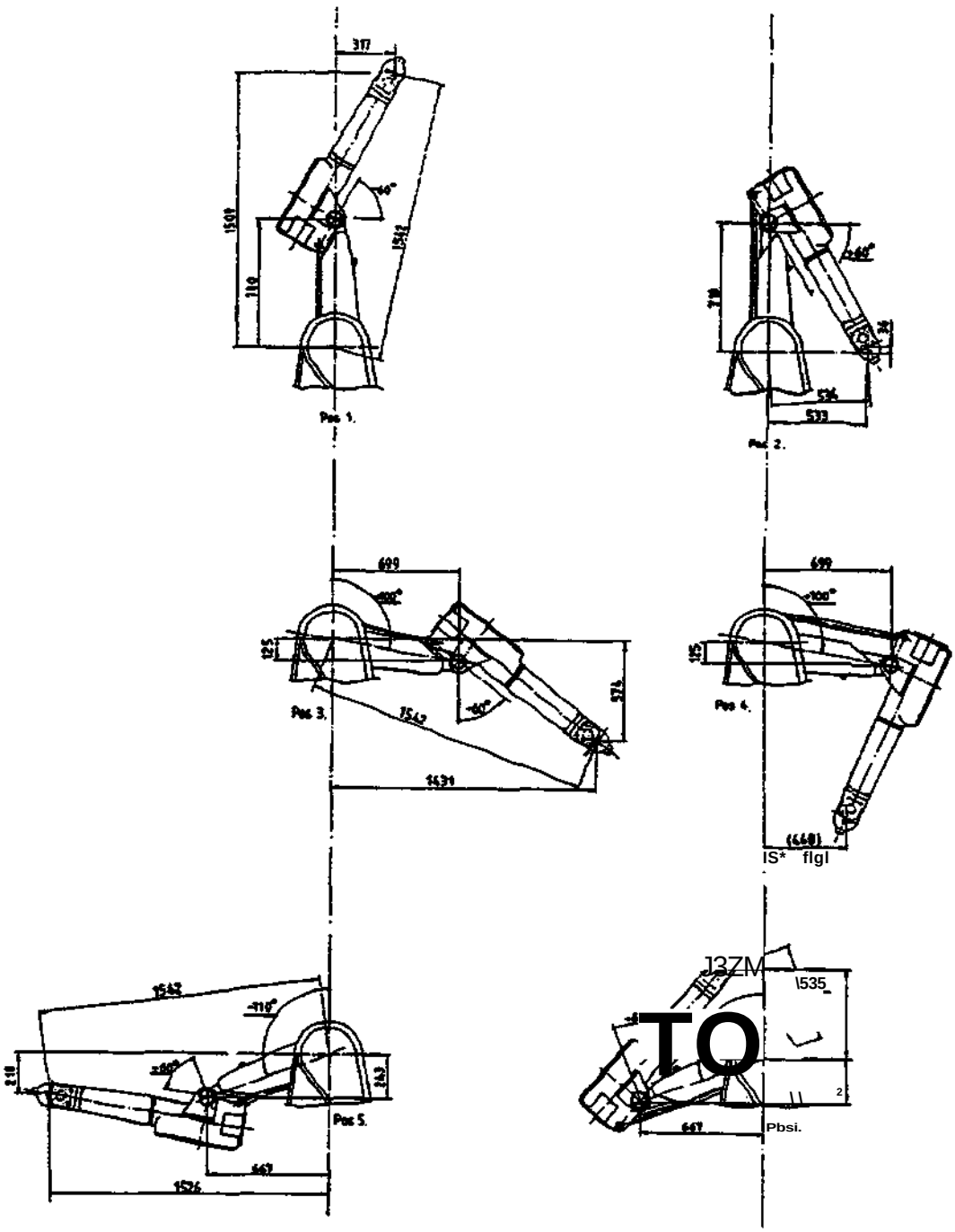

Fig 5.3 Position of the robot arm in its extreme positions. All dimensions in millimetres.

5.1.7 Load diagram

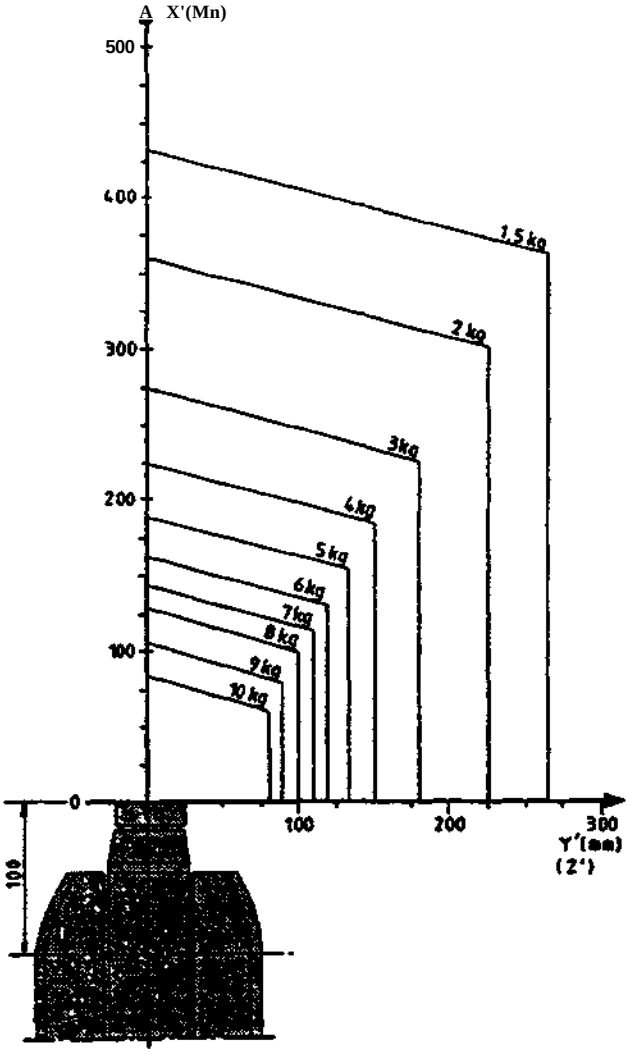

Fig 5.4 Permitted load as function of the location of the mass centre of gravity, relative to robot mounting flange.

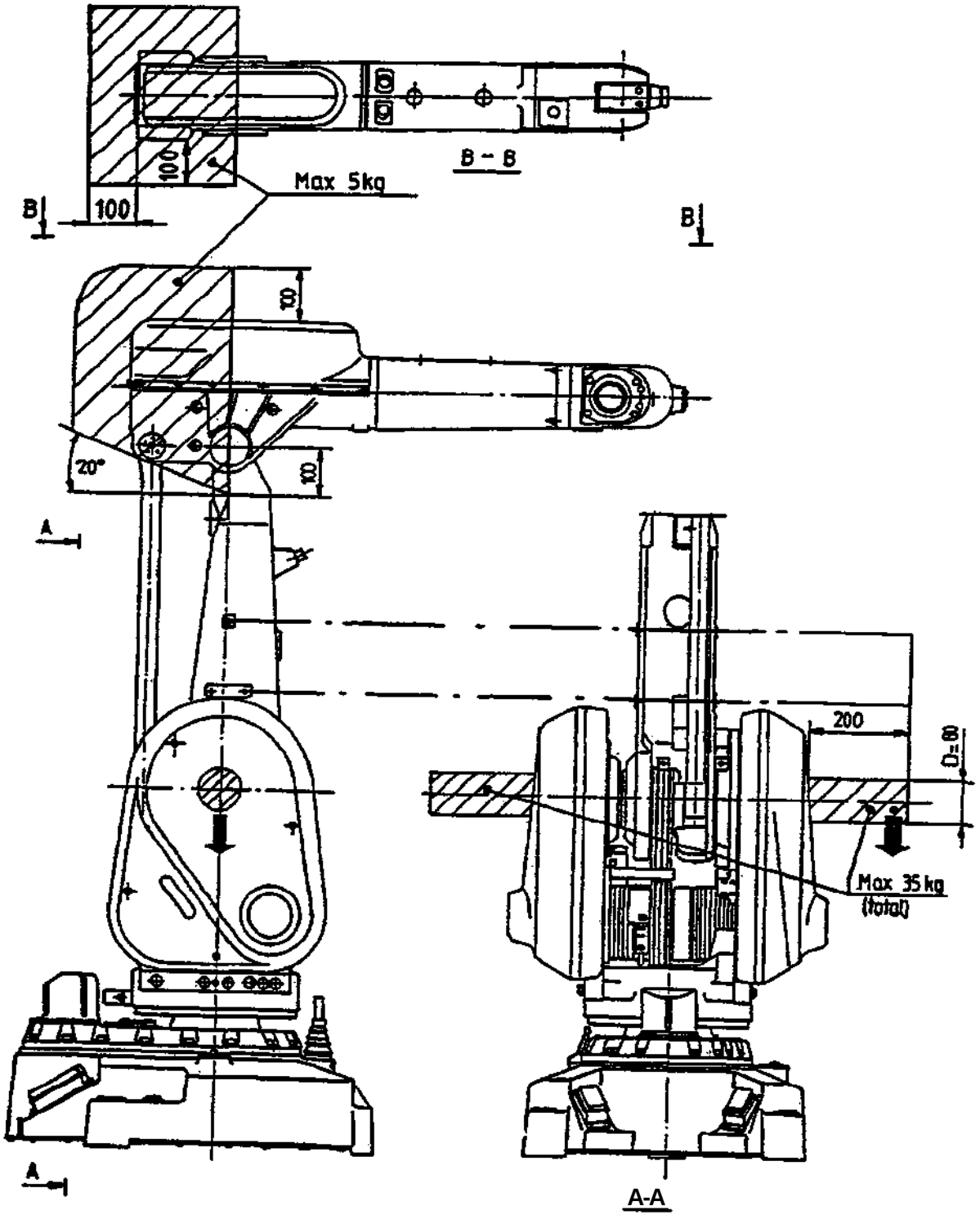

Fig 5.5 The cross lined area indicates centre of gravity allowed extra load at the mass point.

5.2. Requirements

5.2.1 Environmental requirements

Protection standard

Cabinet	IP 54(NEMA 12)
Manipulator	IP 54(NEMA 12)

Explosive atmosphere

The robot shall not be placed and operated within explosive atmospheres.

Ambient temperature

Manipulator, running	+ 5° C — + 45° C
Control cabinet and programming unit, running	+ 5° C — + 40° C
(with heat exchanger or air conditioner	+ 5° C — + 45° C)
Complete robot, during transport and storage	- 25° C — + 55° C

Relative humidity

Complete robot during transport and storage	Max. 90%

5.2.2 Electrical connections

Power supply

Mains voltage	200 - 600 V, 16 A, three-phase
Voltage tolerance	+ 12%, -15%

I/O (option) can also be supplied from external voltage supplies for galvanic isolation. See under "Control system"(150 Input/output capacity).

Frequency	50/60 Hz
Frequency tolerance	± 1 Hz

Power consumption

MOTOR ON, program running	2 kW
MOTOR OFF	300 W

5.3 Physical data, dimensional drawings

5.3.1 Physical data

Weight

Manipulator	350 kg
Control cabinet system	280 kg

Volume

Manipulator (transport excl. packing)	1750 x 1000 x 700 mm
Control cabinet	1700 x 915 x 530
Control cabinet with cooling device	2065 x 915 x 530

Airborne noise level

The sound pressure level outside the safe guarded working area	< 70 **dB** (Leq)

5.3.2 Dimensional drawings

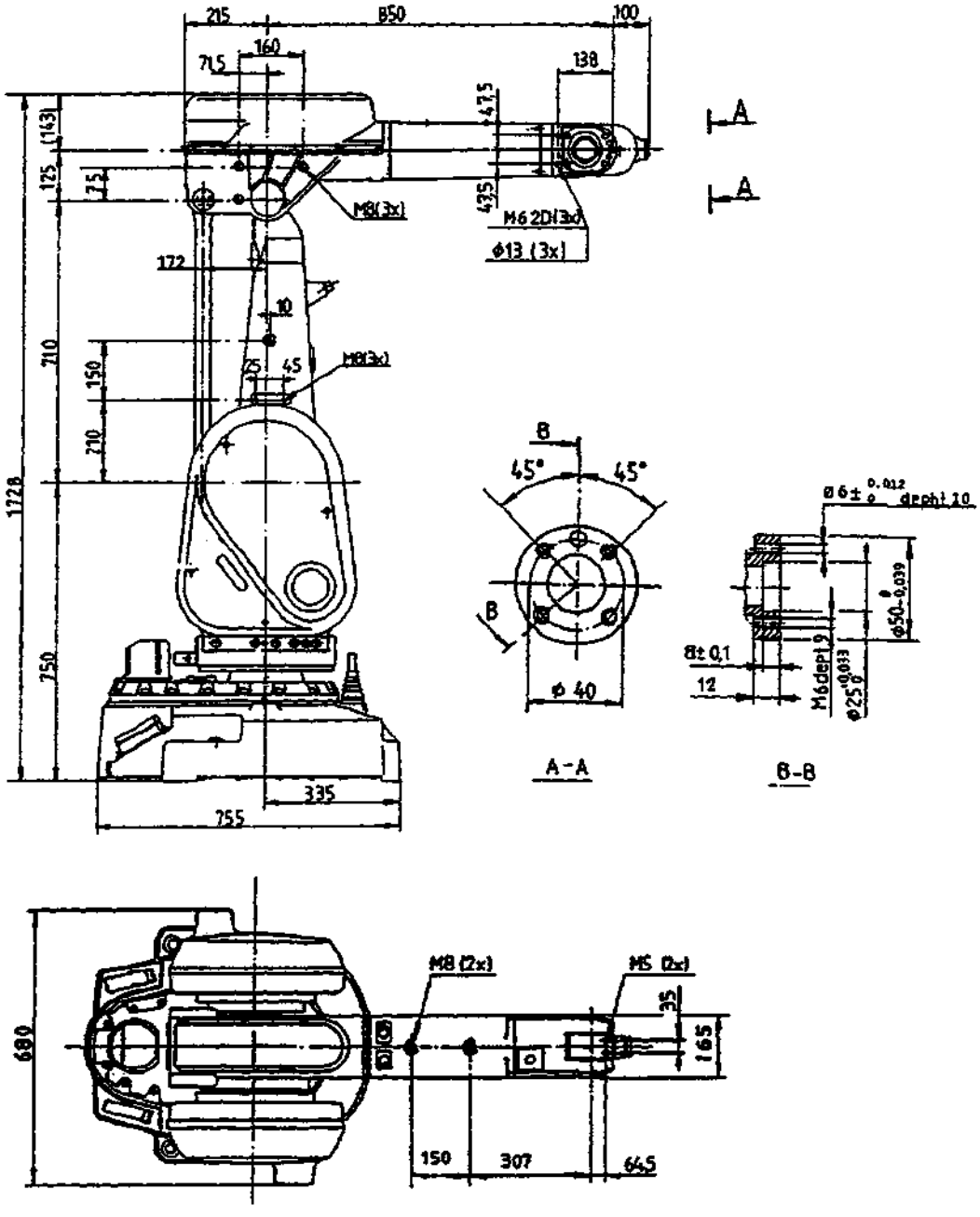

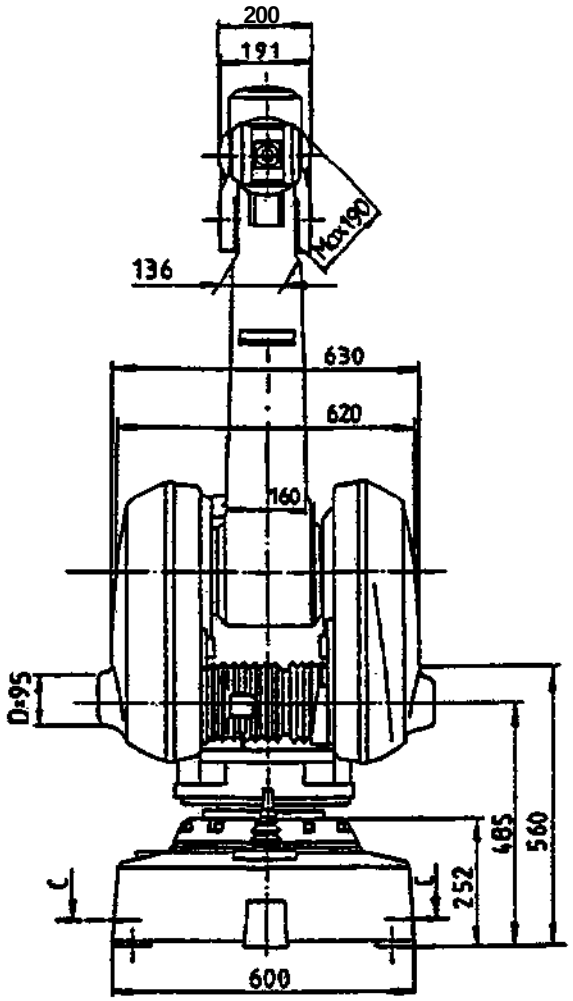
200
191
Max190
136
630
620
160
D=95
485
560
252
600
C
C

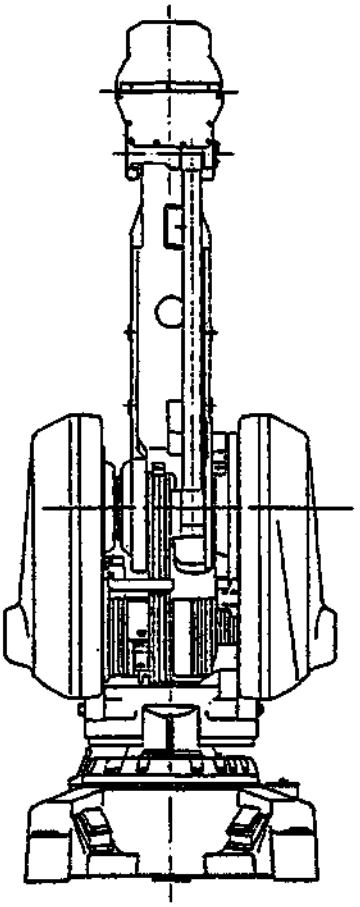

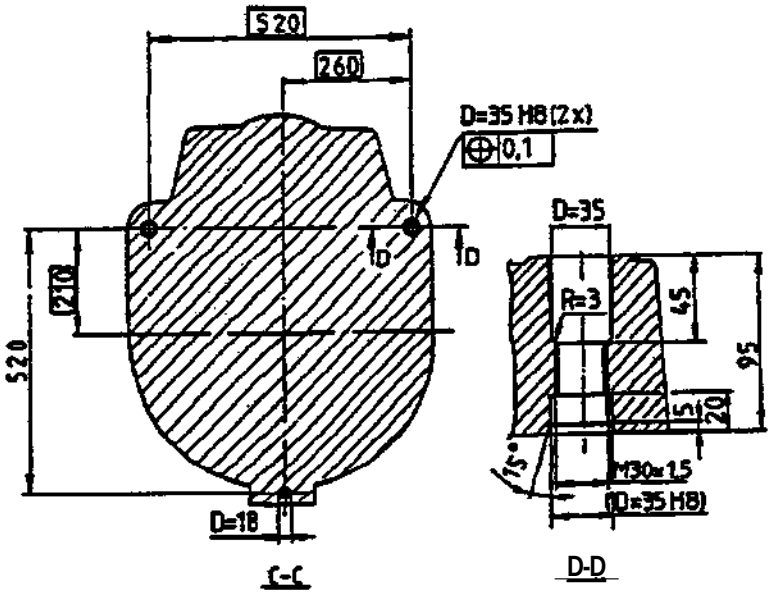
520
260
D=35 H8 (2x)
0,1
D
D
210
520
D=18
C-C
D=35
R=3
45
95
15
20
75°
M30x1,5
(D=35 H8)
D-D

Dimensional drawing
Control cabinet

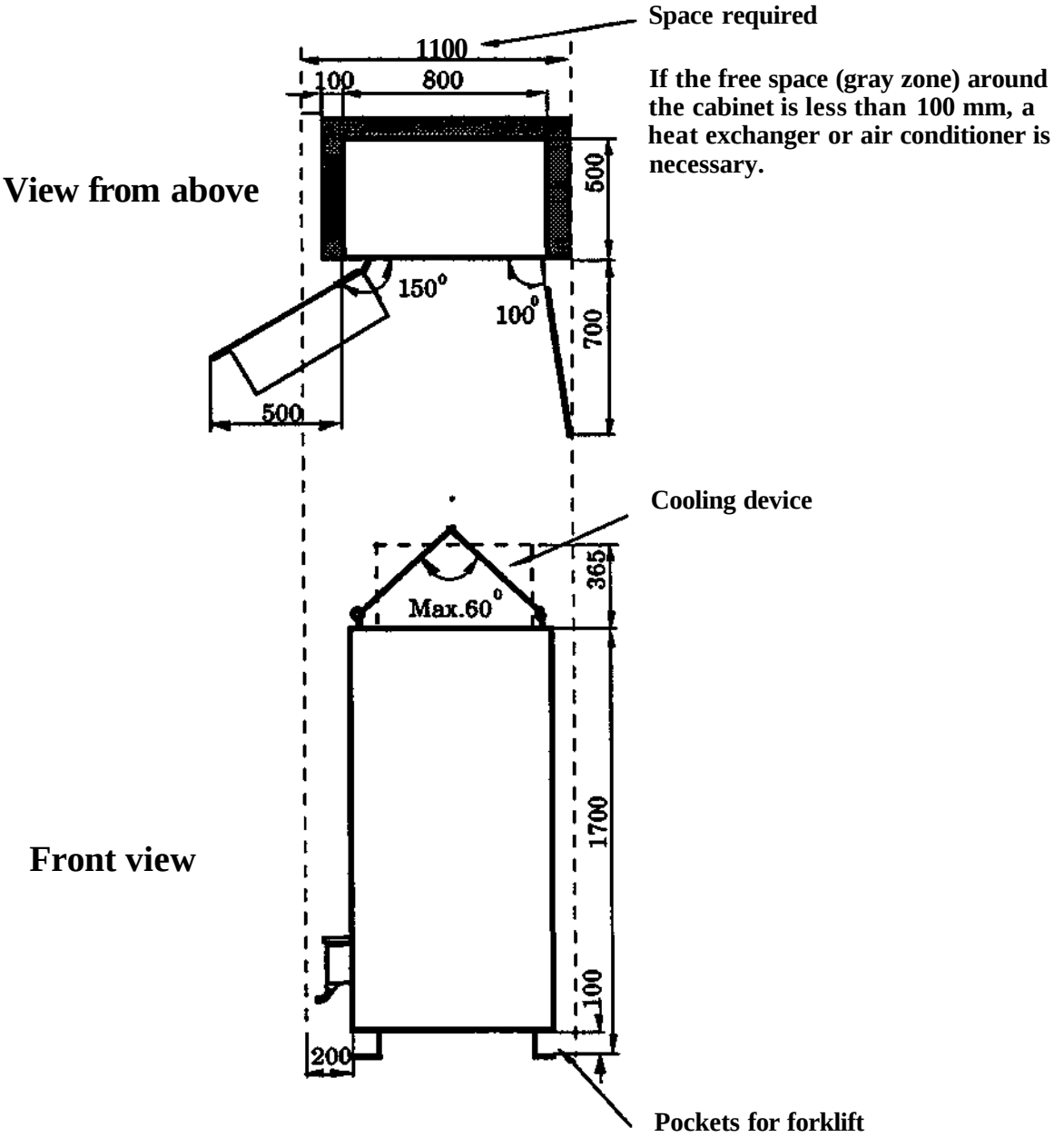

5.4 Standards

5.4.1 General

The mechanical robot and the control cabinet have been designed to fulfil the requirements in IEC 204-1 and SS EN 60204.

The SS EN 60204 document contains the text from IEC 204-1, but with a number of modifications and supplements common to CENELEC (Comité Europe'en de Normalisation Électrotechnique). EN 60204 is common to all EEC- and EFTA- countries.

5.4.2 Safety

The robot is designed in accordance with the requirements of ISO 10218, Jan 1992, Industrial Robots Safety. The robot also fulfils the requirements in the Manchinery Directive 89/392/EEC as defined in EN 775, October 1992. The robot also fulfil the ANSI/RIA 15.06-1992. With the exception of slow speed definition.

6. SPECIFICATION OF THE ROBOT

The options are described below using the same headings as the ones in the specification form.

6.1 Manipulator

40 Application interface (customer connection)

43 Air and signals to upper arm

An integrated air supply system is located within the arms. Connection in the base and outlet in the moving section of the upper arm.
The signall system is part of the cabling of robot. Connection point at the turning point of the upper arm, consisting of 3 contacts. See chapter 5.1.4 Signal capacity.

6.2 Control system

130 Connection of mains supply

The way the main voltage is connected to the control system can be selected from either permanent installation or with wall terminals on the left side of the cabinet.

131 Cable bushing

Connection is at the mains filter in the control cabinet, the cable being led through a screw cap in the wall 11-12 mm. diameter.

131/132 Connection via wall terminal as per IEC 309-1, -2, CEE 17.

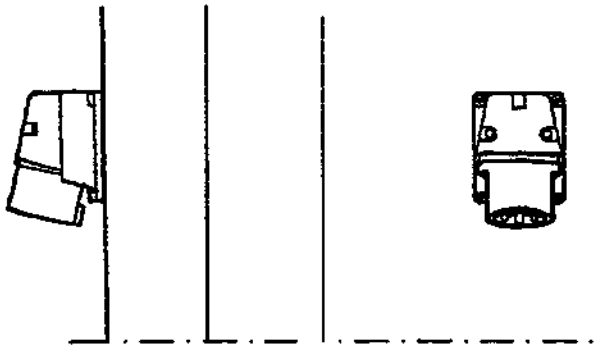

Fig 6.3 Wall inlet.

132 3 x 16 A with protective earth.
133 3 x 32 A with protective earth.

134 Industrial contact unit as per DIN 41640
35 A 600V, 3 phases + earth protection.
Neutral can also be connected to this terminal

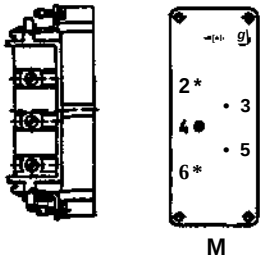

Fig 6.5 Contact unit

140 Mains supply circuit-breaker

141 **Rotary switch** as per IEC 204, IEC 337-1, VDE 0113. UL, EN 60204.

143 As an accessory for the rotary switch there is a 20 A circuit breaker, for protection of the main voltage in the cabinet.

According to IEC 898, VDE 0660.

Fig 6.5 Circuit breaker

145 **Flange disconnect switch**
The control system can be provided with a front-operated flange disconnect switch, maximum voltage 480 V, with integral 20 A circuit breaker.
The flange disconnect switch is in addition provided with mechanical door interlocking when the switch is in the ON position.
For service purposes door interlocking can be by-passed using a screwdriver.

150 Mains voltage

The robot can be connected to mains voltages between 200 V - 600 V, 3 phase + protective earth.

151

Transformer 1	Transformer 2	Transformer 3
• 200 V	• 380/400 V	• 200 V
• 220 V	• 400/415 V	• 220 V
	• 440V	• 380/400 V
	• 475 V	• 400/415 V
		• 440 V
		• 475 V
		• 500 V
		• 525 V
		• 600 V

180 Placing of operator panel

The units for operator communication are an operating panel and a programming unit.

The operating panel, the shelf for the programming unit and the monitor (opt 403) can be located either:

181 • At the front of the control cabinet
182 • In a separate unit for operator communication, cable length included 15 m.

190 Control electronics for external axes

Apart from the six axes of the manipulator, the system can position-control six external axes. The control cabinet contains parts of the electronics necessary to control the external axes.
Connection is via contact devices complying with DIN 43652 on the left side of the cabinet.

The following programmable functions also apply to the external axes:

* Running up to a progam position, including the percentage speed value, with or without stated positional accuracy.

• Parallel displacement of the motion pattern with the help of a reference point. The result will be a displacement of the pattern along the work envelope for the axis in question (linear movement), or movement of the motion pattern around the rotation centre (rotating movement).

The control cabinet can be equipped as in one of the following alternatives:

191 **Integrated axis 7,** i.e. drive unit for the axis 7 is located in the control cabinet.
- Integrated axis 7 is designed for track motion IRBT 2000/3000S.

192 **Integrated axes 7 and 3 external axis.** Same as option 191, there 3 external axis can be driven.

193 **When all external axes drive units are installed outside the control cabinet** up to 6 external axes can be driven.
- A maximum motor speed of 3000 rpm is allowed.

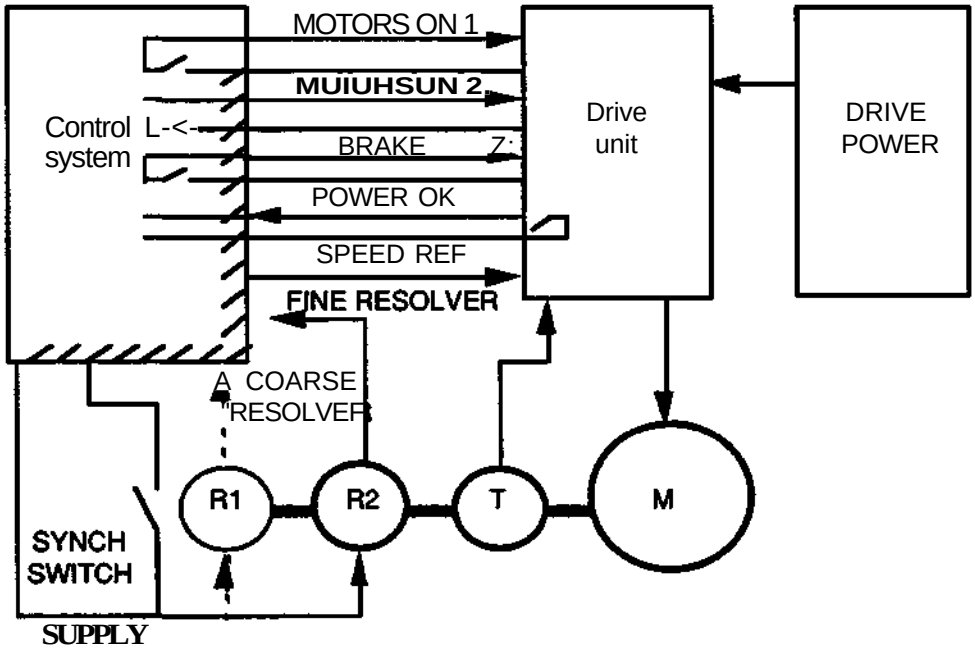

Fig. 6.6 Signal adaptation for external axes with external drive units

Signals to external drive system:

MOTOR ON (double contacts)	Rated data 250 V AC/110 V DC, 1A
BRAKE,	Rated data 250 V AC/110 V DC, 1A
Speed reference	± 10 V analogue
Motor speed	max. 3000 rev/min

Signals from external drive system:

POWER OK	24 V DC from control system
Synchronising switch	24 V DC or resolver supply

Feedback

Resolver specification:	1st resolver ratio 1:1 2nd resolver ratio 136:137 Resolver of transmitter type Voltage ratio 2:1 (rotor:stator)
Excitation:	To one or two resolvers and to synchronising switch. Excitation voltage 5.7 V/2 kHz

200 I/O CAPACITY

I/O units are not included in the basic versions of IRB 2000.

In all, there are 6 available I/O slots (max. 5 with option 405 Winchester memory included):

- digital I/O, 16 in/16 out, max. 6 units (1 slot per unit)
- analogue I/O, 4 in/4 out, max. 1 unit (1 slot)
- AD combined I/O, digital 16 in/ 16 out and analogue 2 out, max. 1 unit (1 slot)
- RIO remote link for Allen Bradley PLC, max. 1 unit (2 slots)

With regard to analogue and combined I/O, only one of the units can be used in the system at the same time.

20X Digital I/O

Digital I/O unit

Inputs:	16 opto-connected Rated voltage: 24 V DC Current at rated input voltage: 5.5 mA
Outputs:	16 opto-connected, short circuit protected Rated voltage: 24 V DC Load capacity per output: 200 mA Load capacity per group of 8 outputs: 1A

The unit is electrically divided into 4 parts, with 8 inputs or outputs in each part. Each part requires a separate voltage supply as follows in accordance with one of the following alternatives:

- Internal supply from the control system, not galvanically insulated from the electronics in the cabinet.
- External supply, galvanically insulated from the electronics in the cabinet. Voltage range 19-35 V DC.

Connection points for the internal and the external supplies are provided in the system.

Reserved I/O groups.

Four groups of digital I/O may be reserved via the system parameters:

- system I/O
- remote control
- weldequipment (AW)
- drive units (AW)
- gripper 3-8 (GL, MH/ASST)
- digital gluing I/O
- SWI (GL, MH/ASS'Y)

Contents and effects of reservations are described below.

System I/O
Contents:

Control signals for:
- operation of grippers 1 and 2 (outputs)

Interrupt signals (inputs):
- CALL for sub program 1-5 (inputs)
- INTERRUPT PROGRAM
- INTERRUPT INSTRUCTION

Status signals (outputs) for:
- MOTOR ON
- CYCLE ON
- ERROR (error during program running both AUTO and MANUAL)
- Operating mode selector in position MANUAL
- SEARCH STOP

Requires: 8 inputs/8 outputs
Location: Last half of chosen I/O board.

Activated system I/O will shift subsequent numbering of inputs and outputs.
Not valid if the function I/O-map have been used.

Remote panel

Contents: Inputs:
MOTOR ON
MOTOR OFF
FROM DISKETTE
KEY (locked programming unit)
LAMP TEST
PROGRAM STOP
PROGRAM START
SYNCHRONIZE (external axis)

Outputs:
MOTOR ON
MOTOR OFF
PROGRAM STARTED
PROGRAM STOPPED
FROM DISKETTE
ERROR (all errors, including handling errors)
EMERGENCY STOP
SYNCHRONIZE (external axis)

Requires: 8 inputs/8 outputs
Location: First half of chosen I/O board.

Activated remote control panel will shift subsequent numbering of inputs and outputs
Not valid if the function I/O-map have been used..

Welding equipment (AW)
Signals
Signals reserved for welding equipment for the arc welding version (AW).

Contents: inputs:
- supervision, gas/liquid cooling
- supervision, current
- wire feed, on
- process, off
- weaving, off

outputs:
- voltage, on
- wire feed, on
- gas, on

Resered: 5 inputs + 3 outputs
Location: input 6-10, output 7-9

Drive units (AW)
Contents: To define that two axes share the same drive unit
Reservation: 1 inputs + 1 outputs
Location: input 11-16

Gripper 3-8 (GIV, MH / ASST)
Contents: 1-6 control signals for gripper operation.
Reservation: 1-6 outputs depending on required number of grippers.
Location Sequential placing after chosen output for gripper 3.

Digital gluing I/O (GL)
Contents: Glue inhibit, glue reference error
Reservation: 1 inputs / 1 outputs
Location: Input 6 / Output 7

SWI Spot Weld Interface (SW)
Contents: Control signals for welding controller (outputs):
- Start 1
- Start 2
- Current enable
- Weld power
- Reset
- Gripper 1
- Gripper 2
- **Parity**
- Weld program "1" Call weld prog. 9-13
- Weld program "2"
- Weld program "4"
- Weld program "8"
- Weld program "16"

Control signals from equipment and weld controller (inputs):
- Weld ready
- Timer OK
- Current OK
- Flow OK
- Temp OK
- Enable move

Requirement: 6 inputs/13 outputs
Location: Firsthalf of the inputs and both halves of the outputs on the I/O board selected.

I/O **map**

The system is supplied as standard with the above configuration.
By using an I/O map inputs and outputs can be individually allocated an optional channel ("mapping") to adapt I/O to the installation.

For further information regarding I/O mapping, see the installation manual for S3.

I/O ports

Series and parallel I/O are available and can be activated from the user program when necessary.
When they are not activated as ports, they operate as individual inputs and outputs.

Series ports

Input port

Design:	4 parallel input channels for 16-bit data words. 4 outputs for control data 2 out + 1 in for hand-shake routines.
Requirement:	6 outputs/5 inputs
Location:	Output 1-6 and input 1-5

Output port

Design:	4 parallel output channels for 16-bit data words 2 out + 1 in for hand-shake routines.
Requirement:	6 outputs/1 input
Location:	Output 1-6 and input 5

Parallel I/O ports

4-bit I/O ports

Quantity:	2 in and 2 out.
Location:	Input/output 1-4 and 13-16.

8-bit I/O ports

Quantity:	2 in and 2 out
Location:	Input/output 17-24 and 25-32

227 **Analogue I/O unit**
(with common 0 V)

Inputs:

2 with switching frequency = 10 Hz for the input filter
2 with switching frequency = 100 Hz for the input filter

Data:

Input impedance	1 Mohm
Input voltage	±10 V
Resolution	10 mV (10/1024 V)
Accuracy	15 mV + 0.2% of input voltage

Outputs:

3 voltage outputs

Output voltage	±10 V
Load	>2 kohm
Resolution	10 mV (10/1024 V)
Accuracy	25 mV + 0.5% of output voltage

1 current output

Output current	±20 mA
Load	<450 ohm
Resolution	20 µA (20/1024 mA)
Accuracy	60 A + 0.5% of output current

The analogue unit requires separate power supply ±15 V according to one of the following alternatives:

- Internal ±15 V supply, not galvanically insulated from the electronics in the control cabinet, only intended for analogue I/O. Internal supply is available in the unit's connector.
- External supply, galvanically insulated from the electronics in the control cabinet.
  Voltage tolerance , ± 15 %

Connection points for internal and external supply are available in the system.
Reserved I/O:

Reserved I/O:
The following groups of analogue I/O are reserved:
- Analogue arc weld I/O (AW)
- Analogue gluing I/O (GL)

The contents and meaning of the reservations are described below:

Analogue arc weld I/O

Contents:	- voltage reference - current reference
Reserved:	2 outputs
Location:	output CHI and CH2

Analogue gluing I/O

Contents:	- glue flow reference - air flow reference
Reserved:	2 outputs
Location:	output CHI and CH2

238 AD Combi I/O unit

Digital I/O

- Inputs: 16 opto-connected
  Rated input voltage: 24V DC
  Input current at rated voltage: 5.5mA

- Outputs: 16 opto-connected, short circuit protected
  Rated output voltage: 24V DC
  Load capacity per output: 200mA
  Load capacity per group of 8 outputs: 1A

The unit is electrically divided into 4 parts, with 8 inputs or outputs in each part. Each part requires a separate voltage supply in accordance with one of the following alternatives:

- Internal supply, *not* galvanically insulated from the electronics in cabinet
- External supply, galvanically insulated from the electronics in the cabinet. Voltage rang 19-35 V DC.

Reserved I/O, see 20X Digital I/O.

Analogue I/O

• Output:	**2 voltage outputs**
Output voltage	0 - + 10 V
Load	> 2 kohm
Resolution	10 mV (10/1024 V)
Accuracy	25 mV + 0.4 % of output signal

The analogue unit requires separate power supply ±15V, according to one of the following alternatives:

- Internal ±15V supply, *not* galvanically insulated from the electronics of the cabinet only intended for analogue I/O. Internal supply is available in the unit's connector.

- External supply, galvanically insulated from the electronics of the control cabinet. Voltage tolerance: ^15%.

Connection points for internal as well as external power supply are available in the system.

Reserved I/O, see 227 Analogue I/O.

241 RIO board Allen Bradley

Remote link (remote I/O) for communication with Allen Bradley PLC.

With the RIO function, up to 128 inputs and outputs, in groups of 32, I/O, can be transferred serially to a PLC control system equipped with Allen Bradley 1771 RIO node adapter. Only digital, system, and remote panel signals can be transferred with RIO. Connection to RIO is via screw terminals on the inside rear wall of the cabinet. The RIO board takes up two board slots in the rack.

Number of digital I/O boards	Number of I/O via RIO
0	128
1-2	96
3-4 (max.)	64

This product incorporates a communications link which is licensed under patents and proprietary technology of Allen Bradley Company, Inc.. Allen Bradley Company, Inc. does not warrant or support this product. All warranty and support services for this product are the responsibility of and provided by ABB Robotics Products

300 TYPE OF CONNECTION

The control system connections can be adapted to various needs through choices shown below.

30x Free end

Customer connections are available on the inner rear inner wall of the control system. Via an extended ribbon cable with 40-pole connectors for digital or analogue signals, these can be connected to a customer-specific relay and I/O panel (not supplied), which is placed on

the inner rear cabinet wall. Cable contacts are of type DIN 41651.

31x **External connection**

The standard connections to the robot are with 64-pole plug-in connectors DIN 43652 on the outer left-hand side of the control system (seen from the front).

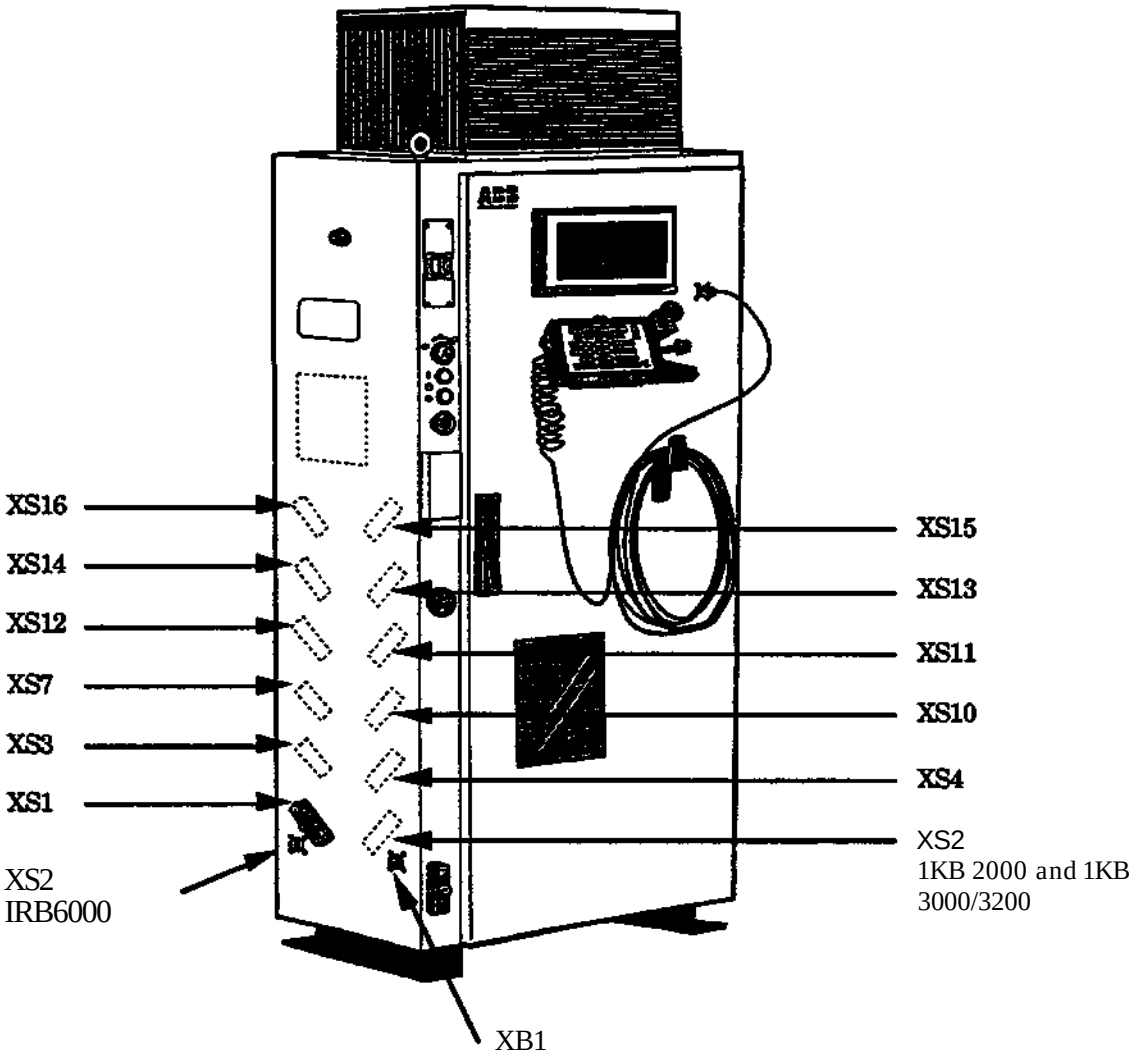

Fig 6.7 External connection

33x **Screw connection**

For customers who do not desire plug-in contacts there is the possibility of connecting signals (apart from the robot's control signals) to various types of screw terminals. These are mounted on the rear inner wall of the control system.

The screw terminal units are mounted on mounting plates provided with cable channels and standard EN 50022 bars for attaching the screw terminal units.
The number of bars are matched to the options selected. In all, up to 5 bars can be mounted; however, this is reduced to 4 with opt 145, flange disconnet switch.

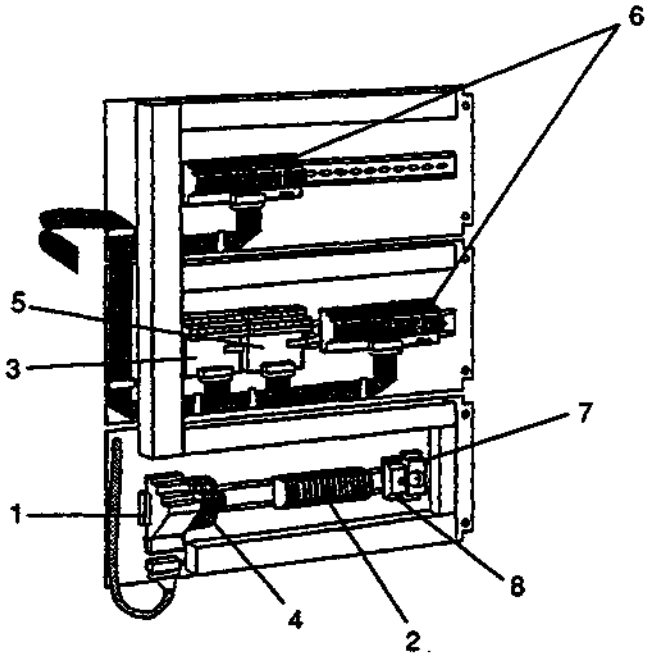

Fig 6.8 Option mounting plate

Safety signals

Safety signals, etc., are connected on a unit (1) on the lower bar. If the option of customer connection (651-656) is selected, these terminals (2) are also placed on the bar furthest down.

Analogue signals

Analogue signals are connected on a screw terminal unit as fig. 6.9. This unit (3) is to be placed on the second bar to the left of the first digital screw terminal unit.

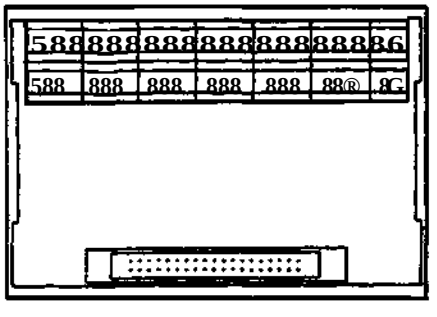

Fig 6.9 Screw terminals unit

339 **I/O supply terminals (4)**

Provided with eight 2 A fuses for fuse protection of 24 V supply to I/O, etc.
As standard, the fuses are connected to the control system's 24 V DC supply, and to all digital screw terminal units.

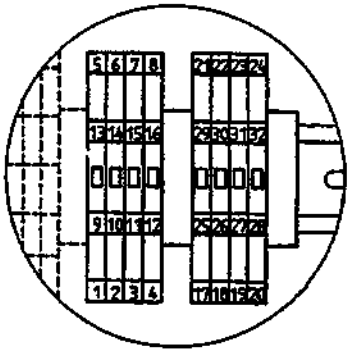

Fig 6.9 I/O supply distribution block with fuses.

For I/O signals, one of the following board units is selected

34x **Screw connection. Digital I/O (5).**
Up to 4 units,see fig 6.9, are mounted on the same bar.

36X Screw terminal connection with disconnect possibility for trouble shooting.
Up to 3 placed on the same bar.

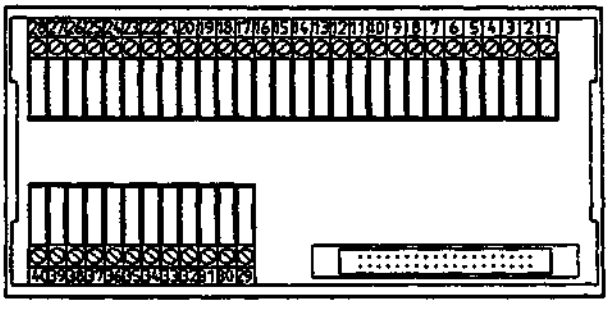

Fig 6.12 Screw terminals unit with disconnect.

37x **Relay** units (6)

Terminal unit with 16 relay outputs.
This option can be selected alone or in combination with 34x or 36x. If the relay units are combined with 34x or 36, they are placed after the other terminal units.
In addition, the relay unit is equipped with 10 + 10 terminals for 24 V DC supply and 8 + 8 terminal for optional supply. Max. load per terminal group 6.3 A.

Data relay unit	outputs
16 relays with one change-over contact	
Maximum current	4 A per relay
Rated voltage	250 VAC

Inputs according to option 20x. T he inputs are not seperated by relays.

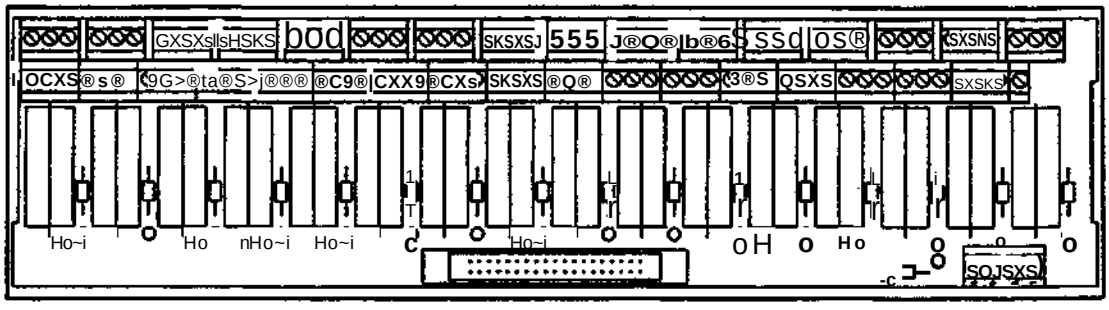

Fig 6.13 Relay units

Connections from connectors

38x **External connections via screw terminal board**
All signals are connected to 64-pole contact units as per DIN 43652 with pin arrangement as per insulation manual S3.

39x As in 38x above, but where the user establishes the pin arrangement by filling in the wiring table 3HAB 2123-7 in conjunction with his order.

400 ADDITIONAL EQUIPMENT

The robot system can be supplied with any desired combination of additional equipment as follows:

401 Program print-out

The print-out function makes it possible to connect a printer to the robot system for printing:

- Individual programs including TCP positions. The operator is able to request 5 print-outs through a signal command.
- The contents of the fault message buffer.
- System parameters.

The robot communicates with the printer through asynchronous series transmission via an RS 232 signal interface. This printer must be fitted with an internal buffer memory.

The connections for the printer are situated on the front of the control system, where there is a 25-pole contact **(D** sub).

402 Computer link

This function permits communication between the robot and a host computer. Communication takes place in asynchronous series form with an RS 232 signal interface.

A programmable instruction is provided:
During programmed running, control of the robot system is transferred to the host computer.
It is possible to work as follows with the computer:

- the computer controls the robot
- the computer loads/stores program blocks or individual programs
  the computer changes the running status of the robot
- the computer starts/stops programmed running of the robot
- the computer erases individual programs
- the robot transmits status information
- the computer stores status information from the robot

At any time the operator can disconnect the computer control of the robot. An additional system parameter defines the identity of the robot (0-127) for the computer. The computer is connected to a 12-pole contact device on the outside of the left-hand wall of the control system.
For further information, see Description Computer Link.

403 Monitor (LCD)

The control system can be supplied with a monitor. All the electronics for the monitor is placed in the control cabinet

The operator has access to the following functions from the monitor:

- Display of parts of the current program with the activated instruction marked. Activation of a new program or any new instruction is shown.

- Valid program data are displayed above the actuated section of the program. Any changes in the program data will appear on the screen.

- The operator can ask for listing of the contens in the error message buffer:

Should an error occur, the monitor will show error messages.

During program execution, the monitor displays the comments included in the programs, one at a time, as the program proceeds.

405 Winchester memory

The Winchester is a hard disk memory to store up to 250 program blocks. Its operation is the same as for floppy disks, but no robot parameters can be stored.
The time taken to read off a complete program from the Winchester is 6-7 seconds.
Winchester memory requires option 444.

406 niumination in cabinet

The cabinet can be provided with internal illumination that lights up when the door is open.
For method of power supply, see option 430.

420 **Service outlet**
For service purposes, an outlet (7) as per standard below can be selected. The outlet is located on the bar furthest down on the rear inner wall of the cabinet. The outlet is protected with a 2 A fuse. All are provided with protective earth connection.

421 230 V mains outlet as per DIN VDE 0620 (Germany, Sweden, etc.).

422 230 V according to French standard.

423 115 V Harvay Hubble

424 115 V according to British standard.

425 115 V according to American standard.

430 Connections to service outlet and illumination.

Power supply to service outlet and illumination can be of three different types.

The outlet may be loaded with up to 100 VA when the control cabinet door is closed.

Service outlet and Illumination options

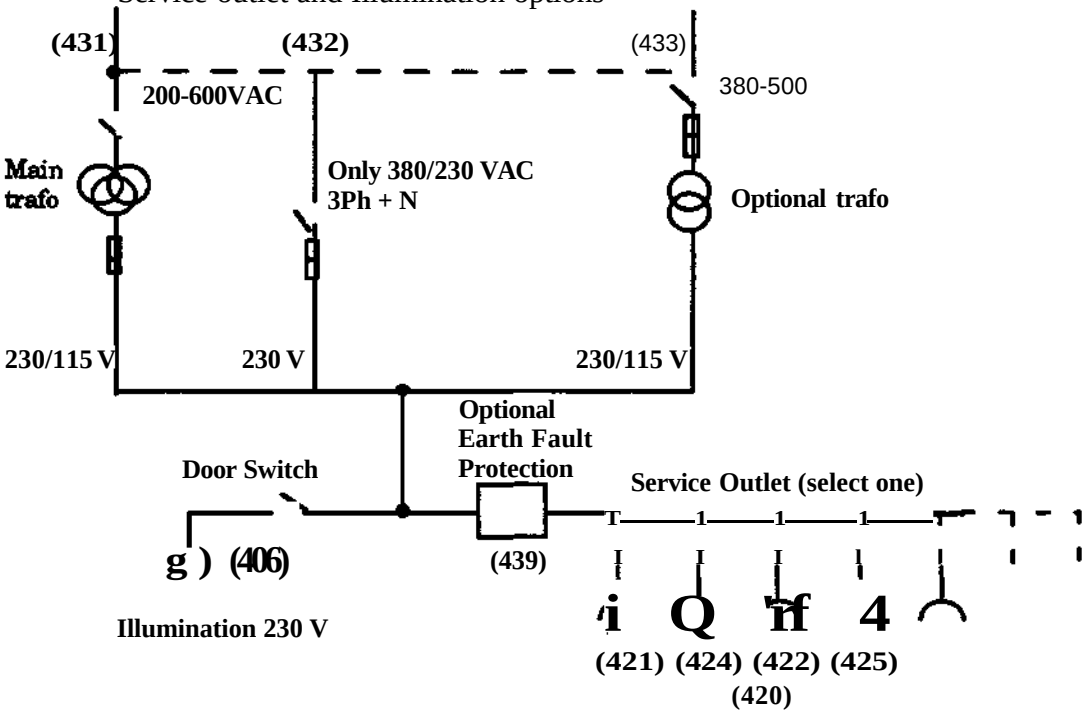

The number in the parenthesis is option numbers.

Fig 6.14 Connections to service outlet and illumination 3.

431 Connection from main transformer.
The voltage is switched off with the mains switch on the front of the cabinet.

432 Connection in front of the mains switch without transformer. N.B. only for main voltage 380 V three-phase with (opt 153) neutral connection and service outlet for 230 V (opt 421, 422).
Cannot be combined with CEE intake (opt 132,133) since these intakes have no neutral connection.

433 Connection in front of mains switch with transformer 380 V - 500 V (only together with opt 153 157) with secondary for 115 V and 230 V, 2 A. For both 432 and 433, the voltage is to be switched off with an circuit breaker mounted in the upper section of the left-hand wall of the cabinet. The circuit-breaker is approved in compliance with IEC.

Earth fault protection for service outlet (8)

439 For better personal safety, the service outlet can be fitted with an earth fault protection that trips at 30 mA earth current. The earth protection is placed alongside the service outlet.

Operating voltage 110 - 240 V AC

440 COOLING EQUIPMENT

443 Heat exchanger

The control system can be delivered with a fiwed heat exchanger on top of the control cabinet. The heat exchanger extends the temperature range to 45°C.

The heat exchanger is required to keep the nominla temperature range to 40°C when the control cabinet is placed so that the cooling effect is not satisfied, i.e. when the free space around the central cabinet is less than 100 mm.
The heat exchanger is working when the cabinet door is closed.

444 Air conditioner

The control cabinet can be fitted with a fixed air conditioning unit. The air conditioning unit is required to keep a temperature below 45° C inside the control cabinet if the ambient temperature is below 45° C.
The air conditioner is working when the cabinet door is closed.

480 Program versions

In addition to basic functions , there are a number of program functions included in one of the program versiona: (see chapter 4)

481 Material Handling/ Gluing -MH/GL/SW

482 **Arc** weld - **AW**

620 Kit for limited working range

The working range of the axes 1, 2 and 3 can be limited. The limiting of the working range is done to further increase the safety.

621 Axis 1
- two extra stops for axis 1, to enable limiting the working range in steps of 15° (minimum working range)

622 Axes 1, 2 and 3
- two extra stops for axis 1, to enable limiting the working range in steps of 15° (minimum working range 30°)
- 5 spacers for axis 2, to enable limiting the working range in steps of 30°
- working range limiting switches for axis 3 in steps of 10°.

640 CONTROL CABLE, MANIPULATOR • CONTROL SYSTEM

The length of the cable between the manipulator and the control system is available in following version:

641 7m
642 15 m

660 Extension cable to the programming unit

661 Length 10 m. To be connected between the control system and the existing contact on the programming unit's cable.
Not more than two extension cables should be used, i.e. a total length of 30 m between the control system and the programming unit.

670 CUSTOMER CONNECTIONS

671-678 Connectors

Industrial connectors as per DIN 43652	**Make** Amphenol	**Articel No. ABB**
• Cover	C146 10A064 000 2	5217 687-22
• Male contact, 64-pole	C146 10G064 502 2	5217 687-24
• 100 contact pins, area 0.14-0.5 mm2	VN 17 050-0004	5217 1021-1
• 100 contact pins, area 0.5-1.5 mm2	VN 01016-0003	5217 1021-2
• Keying pin	VN 01016-0002	5217 687-9
•Label		3HAB 2031-1

The number selected corresponds to the options chosen

For requisite tools, see installation manual S3

700 Documentation

The robot system is supplied with the following technical documentation:

- **Product Manual 1KB 2000:**
  - Description IRB 2000
  - Safety manual
  - Installation IRB 2000
  - Installation S3 control system
  - Maintenance IRB 2000

- **Programming Manual S3**

- **Service Manual S3 control system**
  (incl. circuit diagram S3)

- **Service Manual IRB 2000:**
  - Introduction
  - Maintenance
  - Mechanical repairs
  - Spare parts list
  - Circuit diagram

The following language alternatives are available:

No documentation

702 English

703 Swedish

740 EXTRA DOCUMENTATION

Any number of extra copies of the above documents can be supplied with the robot.

74x Service manual S3 and Service manual IRB 2000

75x Programming manual S3

76x Product manual IRB 2000

Safety
IRB 2000
IRB 3000
IRB 3200
IRB 6000

3HAB 0001-8
JANUARY 1993/M93

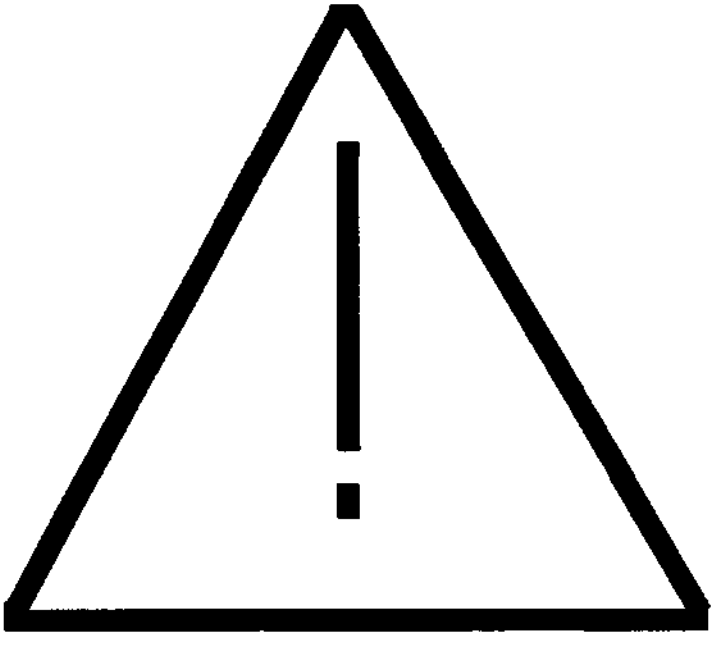

ABB Robotics Products

ASEA BROWN BOVERI

SAFETY

1. General

This information regarding safety covers functions with respect to the operation of the industrial robot itself.
However, it does not cover complete information on how to design, install and operate the entire system, including all peripheral equipment, which can influence the safety of the system and the robot safety function.

To protect personnel, the supplier of the entire system has to design and install the ABB industrial robot in accordance with the safely requirements set forth in the standards and regulations of the country where the robot is installed.

The users of ABB industrial robots are responsible for ensuring that the applicable safety laws and regulations in the country concerned are observed and that all safety devices that are necessary to protect against any injuries to persons who work with the robot system have been installed correctly.

Personnel who work with robots must be trained in advance in the operation and handling of the functions of the industrial robot described in applicable documents, such as programming, installation and service manuals.

INTRODUCTION

Apart from the built-in safety functions in the industrial robot itself, the robot also has electrical inputs and outputs for the connection of external safety devices.

Through these electrical inputs and outputs the robot interacts with other machines and peripheral equipment. This means that control signals can initiate safety functions from the peripheral equipment as well as from the robot itself.

In the Installation Manual instructions are provided for connecting emergency stop circuits and other safety devices between the robot and the peripheral equipment, the software for limiting the range of movement of the individual axes, the mechanical limits for the robot's working space and instructions for transport and assembly.

Service intervals and inspection points on the mechanical unit and the control system are indicated in the Service Manual.

2. Applicable safety standards

IRB 2000, IRB 3000, IRB 3200 and IRB 6000 are designed in accordance with the requirements of ISO 10218, Jan 1992, Industrial Robot Safety. The IRB 6000 also fulfils the requirements in the Machinery Directive 89/392/EEC as defined in EN 775, October 1992. The system also fulfils the ANSI7RIA 15.06-1992 stipulations, with the exception of slow speed definition.

3. Safe working procedures

Safe working procedures have to be followed to avoid injury while performing an assigned task. No safety device or circuit may at any time be modified, bypassed or otherwise changed.

3.1 Normal operations

All normal operations in automatic mode are to be executed from outside the safeguarded space.

3.2 Programming, testing, service

Approaching a robot which is in operation always entails a risk. The robot develops considerable forces even at low speed. When entering into the robot's safeguarded space the applicable safety regulations of the country concerned have also to be observed.

In exceptional cases, when work within the robot's work envelope cannot be avoided, the following must be observed:

- The key-operated switch on the control systemt must be in the MANUAL or MANUAL FULL SPEED position to render the enabling device operative and to block operation from any computer link or remote control panel.
- When the key-operated switch is in the MANUAL position the robot's speed is limited to max. 250 mm/s (10 inches/s). This should be the normal position when entering into the working space. The MANUAL FULL SPEED position allowing full speed may only be used by trained personnel who are aware of the risks that this entails.
- During programming and testing, the robot system is to be in the MOTOR OFF, enabeling device released, mode to ensure that the robot is not moving. The use of MOTOR ON, enabeling device de pressed, mode to move the robot during programming and testing must be reduced to a minimum.

- **The enabling device must never be rendered inoperative in any way.**
- The teach pendant must always be taken along by the programmer when entering through the safety gate to the robot's working space so that no other persons can take over control of the robot without the knowledge of the programmer inside the robot's working space.
- The operator must be aware that the robot can make unexpected movements, e.g. due to a programming error. A robot program consists of a series of different movements. A pause (stop) in a pattern of movements may be followed by a movement at high speed. The operator must also be aware that external signals often affect robot programs so that a certain pattern of movement is changed without warning on the teach pendant.

4. Definitions of safety functions

4.1 Emergency stop, IEC 204-1,10.7:

A condition which overrides all other robot controls, removes drive power from robot axis actuators, and initiates the stopping of all moving parts, and removes power from other dangerous functions controlled by the robot.

4.2 Enabling device, ISO 11161,3.4:

A manually operated device which, when continuously activated in one position only, allows hazardous functions but does not initiate them. In any other position, hazardous functions are stopped safely.

4.3 Safety stop, ISO 10218,6.4.3:

The safely stop is to have provisions to connect safeguards and interlocks to this circuit. It must be necessary to reset the power before any robot motion can be initiated. Resetting of the power by the safety stop itself must not initiate any motion.

4.4 Reduced speed, ISO 10218,3.2.17:

A single selectable velocity defined by the robot manufacturer which automatically restricts robot velocity so as to allow sufficient time for persons either to get clear of hazardous robot movements or stop the robot.

4.5 Safe interlocking, ISO 10218,3.2.8:

An arrangement that interconnects safeguard(s) or similar device(s) with the robot control system and/or power system of the robot and its associated equipment.

4.6 Hold-to-run control, ISO10218, 3.2.7:

A control which allows movements only during manual actuation of that control and which causes these movements to stop as soon as it is released.

5 Safety functions

5.1 The safety control chain of operation

The safety control chain of operation is based on dual electrical safety chains which interact with the robot computer to enable the robot to be put and stay in the MOTOR ON mode.

These electrical safety chains are continuously monitored and the robot reverts to the MOTOR OFF mode when a fault detected by the control computer arises. MOTOR OFF mode means that drive power is removed from the robot's motors and the brakes are applied.

The electrical safety chains consist of several switches connected in series in such a way that they must all be closed before the robot can be put into MOTOR ON mode and power supplied to the motors.

THE ELECTRICAL SAFETY CHAINS

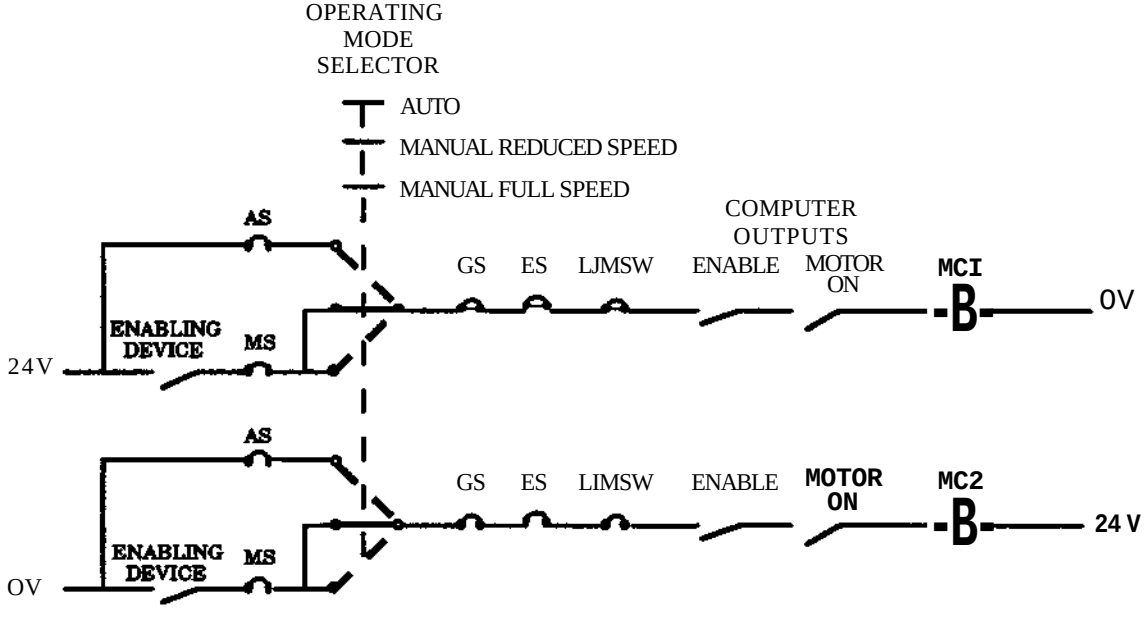

AS = AUTO MODE SAFEGUARDED SPACE STOP
MS = MANUAL MODE SAFEGUARDED SPACE STOP
GS = GENERAL MODE SAFEGUARDED SPACE STOP
ES = EMERGENCY STOP BUTTONS
MCI = MOTOR CONTACTOR 1
MC2 = MOTOR CONTACTOR 2
BC = BRAKE CONTACTOR

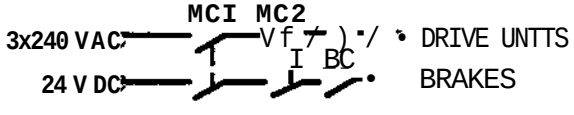

The position of the switches is indicated by the light diodes on the front of the system board in the control cabinet.

When any contact in the safety chain of operation is opened the system will always revert to the MOTOR OFF mode.

After a stop, the switch has to be reset at the unit which caused the stop before the system can be ordered to start again.

The safely chains must never be bypassed, modified or otherwise changed.

5.1.1 Emergency stops

Built-in emergency stop buttons are located on the control panel of the robot control cubicle and on the teach pendant.
External emergency stop devices (buttons, etc.) can be connected to the safety chain by the user (see Installation Manual). This has to be done in accordance with applicable standards for emergency stop circuits.
Before taking into use upon commissioning, all emergency stop buttons must be checked by the user to ensure their proper operation.

An emergency stop should be activated in case of danger to persons or equipment. Before returning to MOTOR ON mode the cause of the stop must be determined and the fault rectified.

5.1.2 Mode selection with key-switch

The applicable safety requirements in accordance with ISO/DIS 10218 on the use of robots is characterised by different modes which are selected by means of control devices with clear-cut positions.

One auto and two manual modes are available:

	AUTO	• Automatic operation
<250 mm/S	MANUAL	• Programming - Adjustment at reduced speed
100??	MANUAL FULL SPEED	• Test at working speed

For automatic operation with the key-switch in AUTO position, all safety arrangements, such as doors, gates, light curtains, light beams and sensitive mats, etc., must be active. No person must be present inside the space marked off by the safety arrangements. All controls, such as emergency stop, the control panel and control cubicle must be easily accessible from outside the safeguarded space.

The MANUAL or MANUAL FULL SPEED mode must be selected when programming, testing or service work is to be performed inside the space enclosed by safeguarding arrangements. Movement of the robot must be executed from the teach pendant and with Hold-to-run control.

Programming and test at reduced speed; key-switch in MANUAL position

Robot movements at reduced speed can be performed as follows:
- Key-switch in MANUAL 250 mm/s position
- Programs can be started only from the teach pendant and with the enabling device activated.

Program execution can be started with PROG ST, INST ST or EXEC BW. If the system parameter "Hold-to-run- control" is activated, one of these buttons must be kept activated. Releasing the button will stop program execution. In this position, the work stop function is not active.

Test at work speed, key-switch in MANUAL FULL SPEED position

Robot movements at programmed speed can be performed as follows:

- Key-switch in MANUAL 100% position
- Programs can be started only from the teach pendant and with the enabling device activated.

This operating mode is for testing programs at full working speed. The robot can also be run manually by means of the joystick.

Program execution can be started with PROG ST, INST ST or EXEC BW. The "Hold-to-run control" requires one of these buttons to be kept activated. Releasing the button will stop program execution.

This mode may only be used by ABB trained personneL The applicable laws and regulations of the countries where the robot is used must always be observed.

Automatic operation; key-switch in AUTO position

Automatic operation can be started when the following conditions are fulfilled:

- Key-switch in AUTO position.
- MOTOR ON mode selected.
- The robot's external axes are synchronised.

The program can be started from the teach pendant or through a connected remote control device.
These functions should be wired and interlocked in accordance with safety instructions and the operator must be outside the area marked off by the safety arrangements.

The MOTOR OFF mode is activated when the position of the key-switch is changed. (Changing from MANUAL to MANUAL FULL SPEED or AUTO mode requires a control query on the teach pendant to be answered before the new operating mode is accepted.)

5.1.3 Enabling device

When the key-switch is in the MANUAL or MANUAL FULL SPEED position, the system can be put into MOTOR ON mode by depressing the enabling device on the teach pendant.

Should the system revert to the MOTOR OFF mode for any reason while the enabling device is depressed, it must be released before the control system can be returned to the

MOTOR ON mode again. This is a safety function to prevent the enabling device from being rendered inactive.

When the enabling device is released, the drive power to motors is removed, the brakes are applied and the control system reverts to the MOTOR OFF mode.
On renewed activation of the enabling device the control system changes to the MOTOR ON mode.

5.1.4 Hold-to-run control

This function is activated in MANUAL or MANUAL FULL SPEED mode. It can be activated by two different ways depending on how the "hold-to-run" parameter is defined at installation.

Besides activating the enabling device, one of the buttons PROG ST, INST ST or EXEC BW on the teach pendant must be held down in order to execute a program. When the button is released the movements of the axis (axes) stops and the robot system remains in MOTOR ON mode. When the button is pressed down again, program execution continues.

In MANUAL mode, the Hold-to-run control can be deactivated by changing the parameter at installation. Deactivated Hold-to-run means that program execution is stopped by pressing the STOP button on the teach pendant.

5.1.5 Connection of GENERAL MODE SAFEGUARDED STOP; GS

The GS connection is provided for interlocking of external safety devices such as light curtains, light beams or sensitive mats. The GS is active regardless of the position of the operating mode selector.

When this connection is opened the robot changes to MOTOR OFF mode. To reset to MOTOR ON mode the device which initiated the safety stop must be interlocked in accordance with applicable safety regulations. This should normally be done in such a way that the stop has to be reset at the device itself.

5.1.6 Connection of AUTO MODE SAFEGUARDED STOP; AS

The AS connection is provided for interlocking of external safety devices such as light curtains, light beams or sensitive mats for external use by the system builder. The AS is especially intended for use in AUTO mode, during normal program execution.

The AS is disconnected when the **key-switch is in the MANUAL or MANUAL FULL SPEED position.**

5.1.7 Connection of MANUAL MODE SAFEGUARDED STOP; MS

The MS connection is provided for interlocking of external safety devices such as light curtains, light beams or sensitive mats for external use by the system builder. The MS is especially intended for additional enabling devices.

5.1.8 Function, limitation of range of motion

For certain applications, movement round the robot's main axes must be limited in such a way that sufficiently large safety zones are created to avoid the danger of injuries caused by collision between the robot and external safety arrangements such as a barrier, etc.

Movement round axes 1 and 2 can be limited with adjustable mechanical stops, and round axis 3 by means of electrical limit switches or mechanical stops. In connection with limitation of the range of motion by means of stops or switches, corresponding software limitation parameters must also be effected. Apart from the main axes, movement round the three wrist axes can also be limited by the computer software if necessary. Limitation of movement round the axes is to be carried out by the user (see Installation Manual).

5.2 Supplementary functions

Functions via specific digital inputs:

- Stop through "program interrupt" or "instruction interrupt" can be activated through connections to digital inputs. These inputs can be used to stop programs in the event of a fault in the peripheral equipment, for example.
- Calling a program (programs 1-5) can be initiated through digital inputs directly or on conclusion of an ongoing instruction. These subroutines may contain routines governing the robot's actions in the event of a fault in the peripheral equipment.

Functions via specific digital outputs:
The following functions can be achieved through connection to these outputs:

- ERROR which indicates a fault in the robot system. Three different ERROR outputs are available (see Installation Manual S3).
- CYCLE ON which indicates that the robot system is executing a program.
- MOTOR ON which indicates that the robot system is in MOTOR ON mode.

6 Safety risks related to end effectors

6.1 Gripper

If grippers are used to hold workpieces, inadvertent loosening of the workpiece must be prevented.

6.2 Tools, workpieces

It must be possible to turn off tools like mill cutters, etc., in a safe and sure manner, e.g. run down timers can ensure guards remain closed until cutters stop rotating.

Grippers must be so designed that the workpiece is retained in the event of an energy failure or disturbances in the control system. It should be possible to release parts by manual operation (valves).

6.3 Pneumatic, hydraulic:

Special safety regulations apply to pneumatic and hydraulic systems.
After shut-down, attention should be paid to residual energy in these system.
The pressure in pneumatic and hydraulic systems must be released before repair work is commenced on them. Gravity may cause any parts or objects which are held by these systems to drop. Dump valves should be used in case of emergency. Shot bolts should be used to prevent tools, etc., from falling due to gravity.

7 Actions during operation disturbances

Disturbances in the working process entail other risks besides those associated with regular operation, since such disturbances can necessitate rectification by hand.

Such rectification must be carried out by trained personnel only, who must be familiar with the entire installation as well as the special risks associated with different parts of it.

The industrial robot is flexible for use in different industrial applications. Caution must always be observed and all work must be carried out to a professional standard and in accordance with applicable safely regulations.

8 Actions during installation and service

To avoid injuries and damage during the installation of the robot system, the regulations applicable in the country concerned and the instructions of ABB Robotics must be followed. Special attention must be paid to the following points:

- The instructions in the Installation Manual must always be observed.
- The main power supply to the robot system must be arranged in such a way that it can be turned off outside the robot's working space.
- The supplier of the entire system has to ensure that all circuits involved in the emergency stop function are interlocked in a safe way and in accordance with applicable standards for emergency stop function.
- Emergency stop buttons must be positioned in easily accessible places so that the robot can be stopped quickly.
- Safety zones, to be crossed before admittance, must be arranged in front of the robot's working space. Light beams or sensitive mats could be suitable devices for such arrangements.
- By means of suitable arrangements such as use of turntables or the like, the operator should be kept away from the robot's working space.
- Persons responsible for operations must make sure that safety instructions are available at the installation in question.
- Persons involved in the installation must be trained in the robot system in question and in safety matters associated with it.

Fault tracing must sometimes be carried out with the power supply turned on. When repairing faults, disconnecting electric leads, and withdrawing or inserting units, the control system must be turned off by setting the main power switch to the OFF position.

Even if the power supply for the robot is turned off, the danger of injury still remains:

- **Axes are affected by the force of gravity when releasing brakes. This means there could be a crushing hazard around the tie rod.**
- **Energy which is stored in the robot for the purpose of counterbalancing certain axes may be released in connection with dismantling.**
- **On dismantling / assembling mechanical units there is a danger of falling objects.**

9 Risks associated with live parts

Control system

Dangerous voltage is carried by the following parts in an S3 control system.

- Main power supply / power switch
- Power unit
- Power supply unit for computer system (220 V AC)
- Rectifier unit (240 V AC and 340 V DC. Note: Capacitors!)
- Drive unit (340 V DC)
- Service outlets (110/220 VAC) (Option)
- Power supply unit for tools or special power supply units for the machining process
- External voltage connected to the control cubicle remains live even when the robot system is disconnected from mains.
- Additional connections

Manipulator

Dangerous voltage may be present on the robot at:
- The power supply for the motors (to 340 VDC)
- User connections for tools or other parts of the installation (see Installation, max. 220VAC)

Tools, material handling devices, etc

Tools, material handling devices, etc., may be live even if the robot system is in the OFF position. Power supply cables which are in motion during the working process may be damaged.

10. Limitation of liability.

The above information regarding safety must not be construed as a warranty by ABB Robotics that the industrial robot will not cause injury or damage even if all safety instructions have been complied with.

Installation
IRB 2000

3HAB 0003-2
January 1993/M93

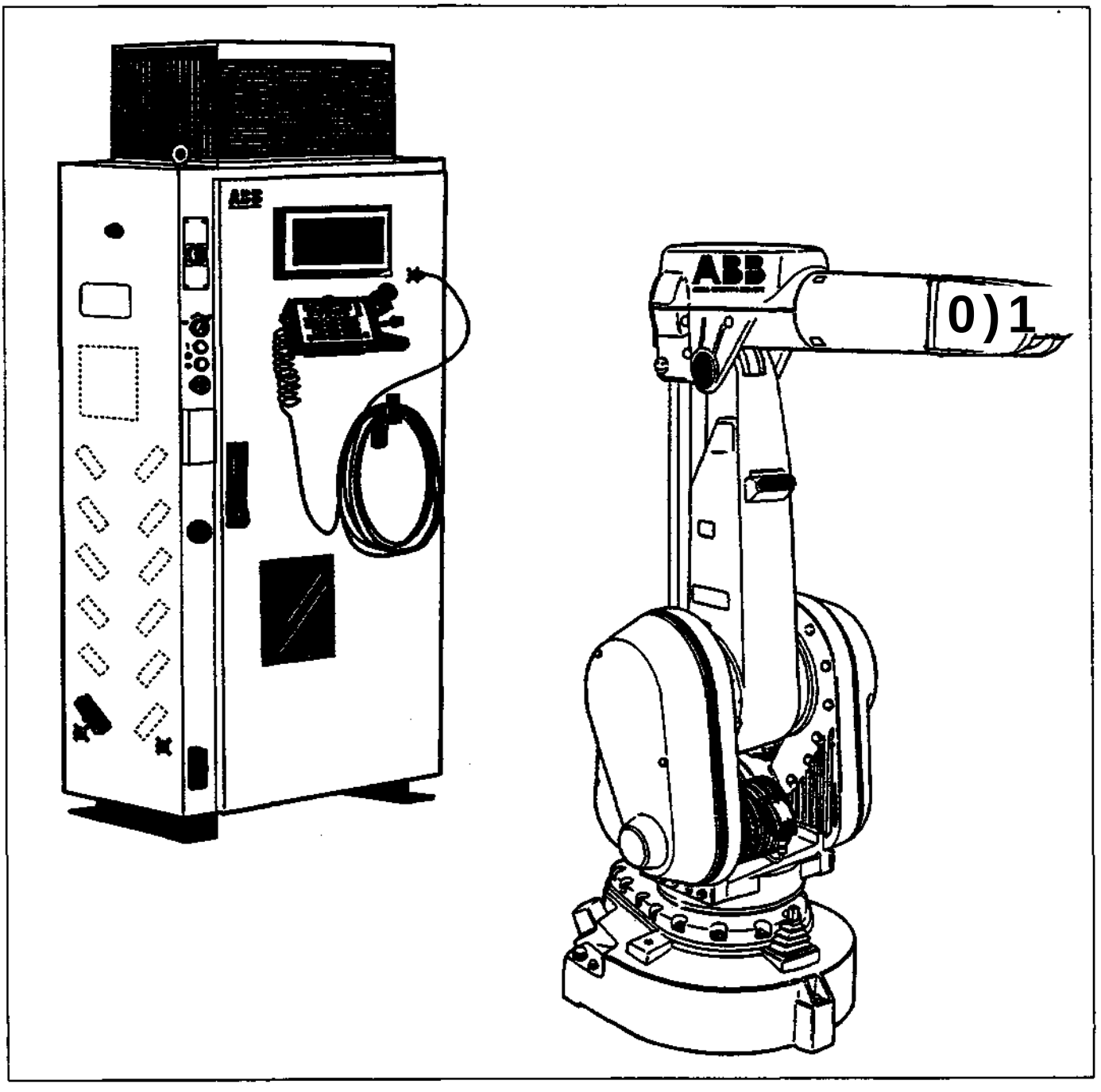

JIM

ABB Robotics Products

ASEA BROWN BOVERI

CONTENTS

1
GENERAL

This instruction describes installing and preparing the robot for running. It contains the following:

- Installation of manipulator
- References to the following documents (not included):

  Circuit diagrams, IRB 2000
  Description, IRB 2000
  Service manual, IRB 2000
  Programming manual, S3

IMPORTANT! Before unpacking and installation, study the safety regulations and remaining instructions carefully! These are found in the Installation Manual of the Control cabinet S 3.

2
UNPACKING AND HANDLING

Immediately after unpacking the robot and the rest of the equipment, check that there has been no external damage during shipping and unpacking.

Environmental factors in service

Ambient temperature	+ 5° to + 45° C
Relative humidity	Max 90%.

Environmental factors in storage

If the equipment is not to be installed immediately, all units are to be stored in a dry area with an ambient temperature of -25° C to + 55° C.

The total weight of the robot is approx. 350 kg.

2.1
Lifting

The recommended method for lifting the robot is to use slings and an overhead crane. Attach the slings to the lifting lugs on the inside of the gearboxes of axes 2 and 3. The dimensions of the slings must comply with the current lifting standards.

Do not pass under a hanging load!

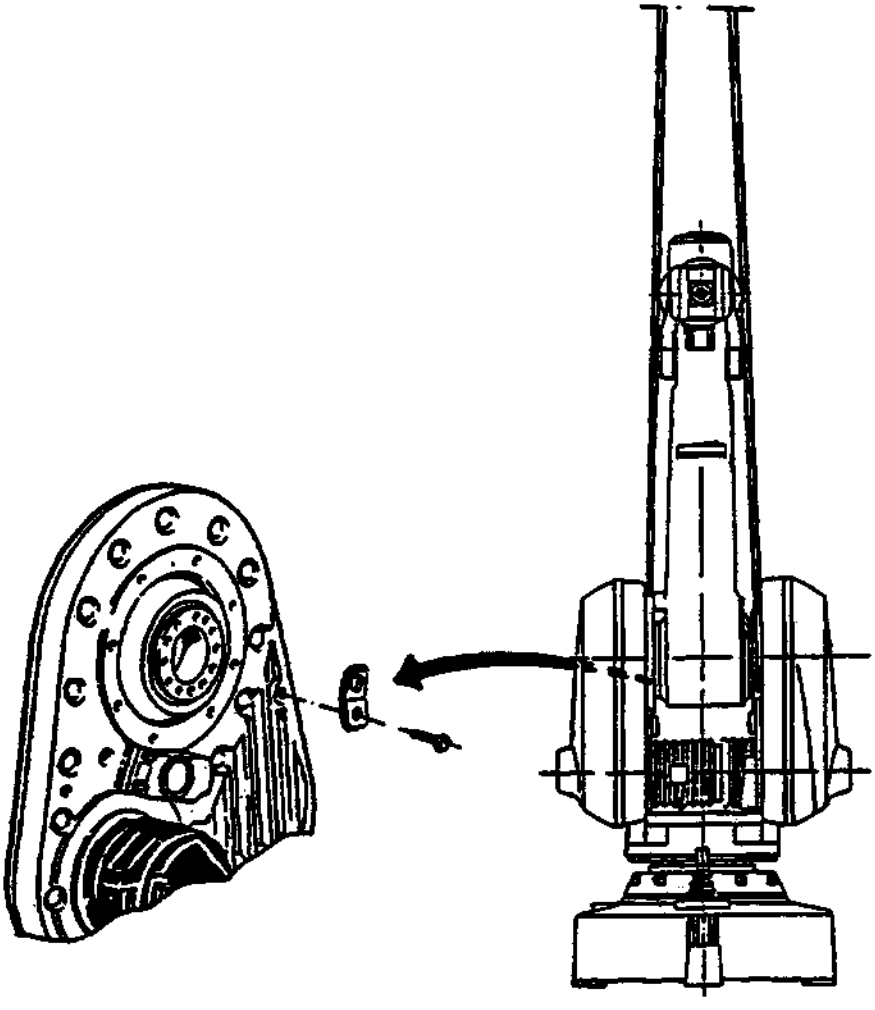

2.2
Tilting

To turn over the robot easily for servicing or suspended mounting, use the tool (art.no. YB 111 056-V) illustrated below. The tool is an option. It attaches to the inside of the gearboxes for axes 2 and 3. Use a fork lift or an overhead crane to lift the robot.

The figure below shows the robot with its axes positioned as they are on delivery, which is also the recommended position when transporting the robot. Instructions for changing the positions of the axes are given in Section 4: "Manual release of brakes".

NOTE! Take extreme care when transporting and handling the robot!

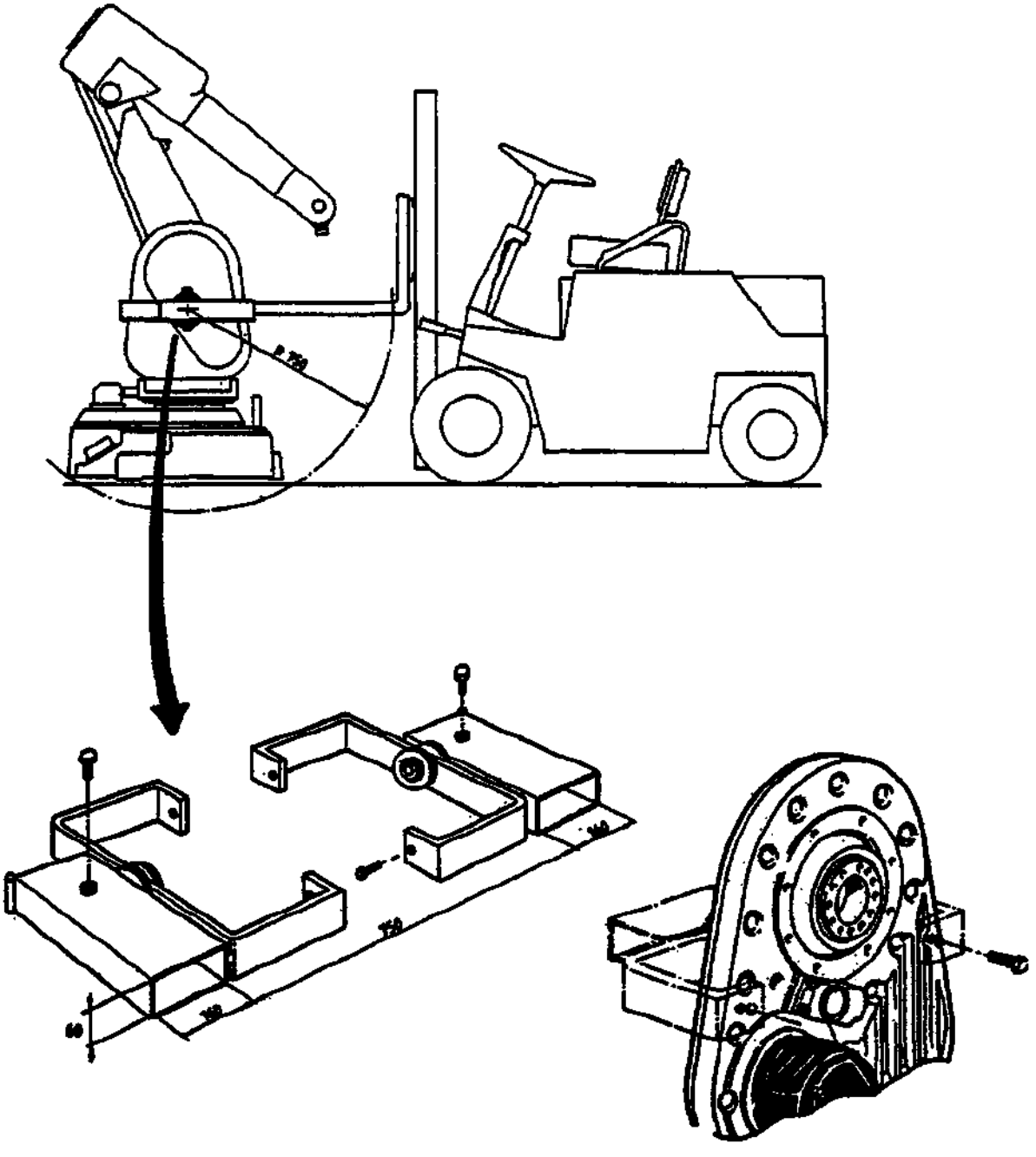

WOLFGANG 01235 535 225

2.2 Tilting

To turn over the robot easily for servicing or suspended mounting, use the tool (art.no. YB 111 056-V) illustrated below. The tool is an option. It attaches to the inside of the gearboxes for axes 2 and 3. Use a fork lift or an overhead crane to lift the robot.

The figure below shows the robot with its axes positioned as they are on delivery, which is also the recommended position when transporting the robot. Instructions for changing the positions of the axes are given in Section 4: "Manual release of brakes".

NOTE! Take extreme care when transporting and handling the robot!

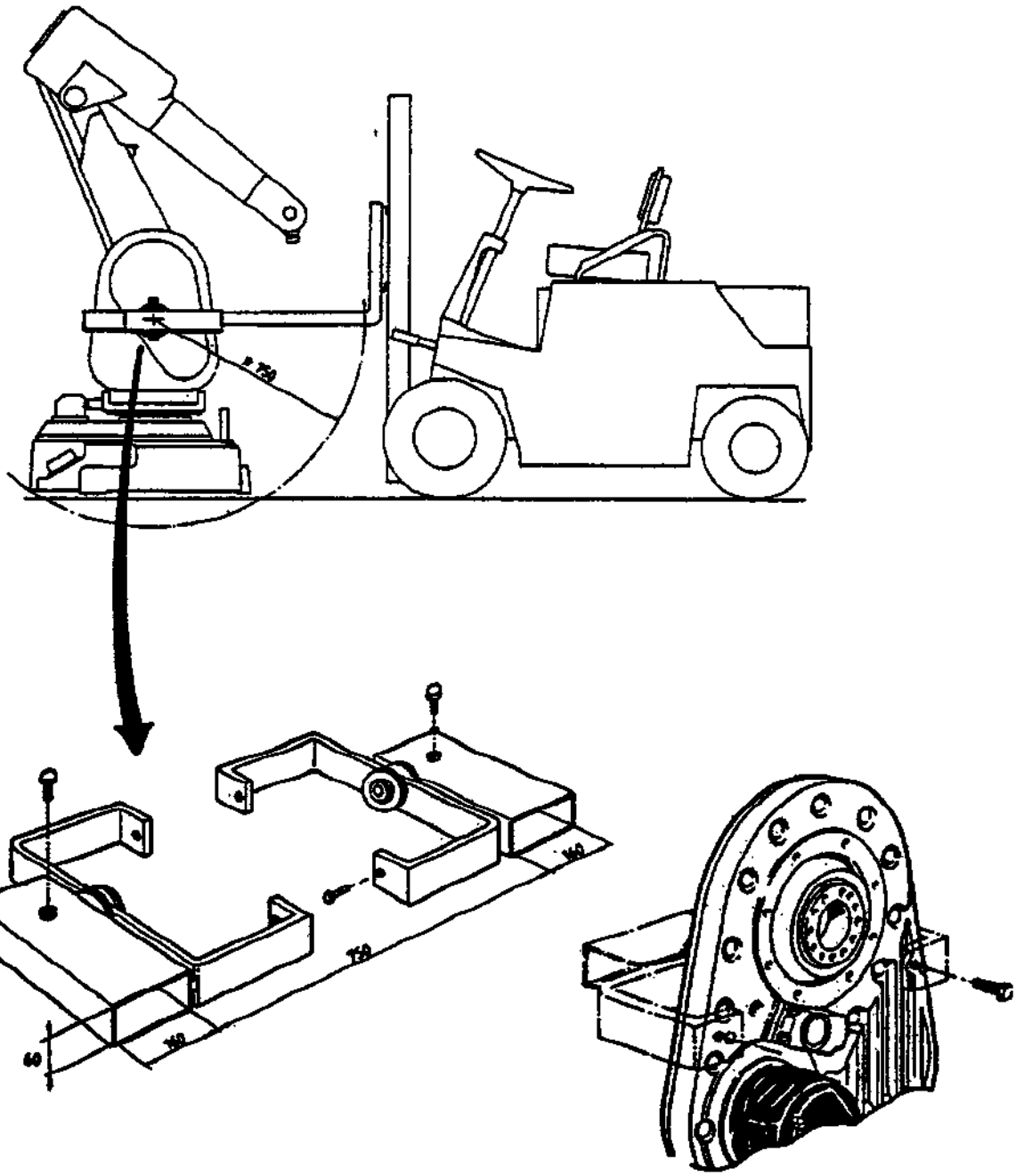

3
ERECTION

The fixing devices illustrated below (art. no. YB 111 056-U)can be delivered for precise levelling of the robot.

3.1
Mounting

The robot must be mounted to a flat surface with the hole pattern shown below, using 3 x M16 screws (tightening torque 190 Nm (19,5 kpm), oil-lubricated screws). The level requirements of the surface are:

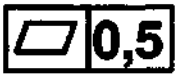

Where accurate adjustment of the robot base and the ability to remount the robot without program adjustments are called for, a special fixing kit can be used (see Description, IRB 2000). Follow the instructions included in the kit.

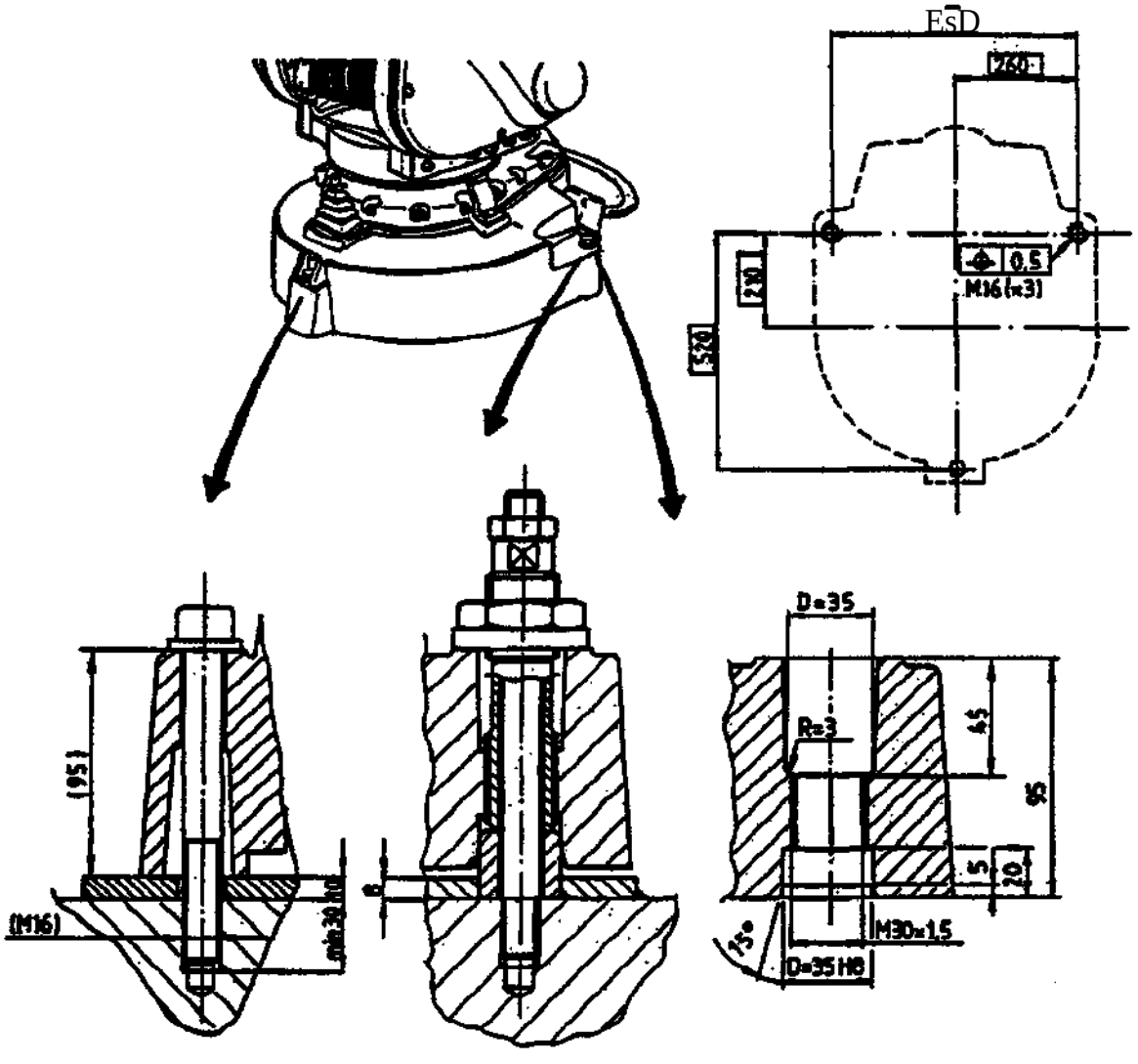

3.2
Foundation loads

Force	Fatigue load (Operation)	Max. load (Emergency stop)
Fxy	±1600 N	±2900N
Fz (upstanding)	3500±1000N	3500± 1900N
Fz (suspended)	-3500±1000N	- 3500 ±1900 N
Moment		
Mxy	± 3100 Nm	±5300Nm
Mz	±600Nxn	± 1500 Nm

Fxy resp. Mxy refers to a arbitrary directed vector in the xy - plane.

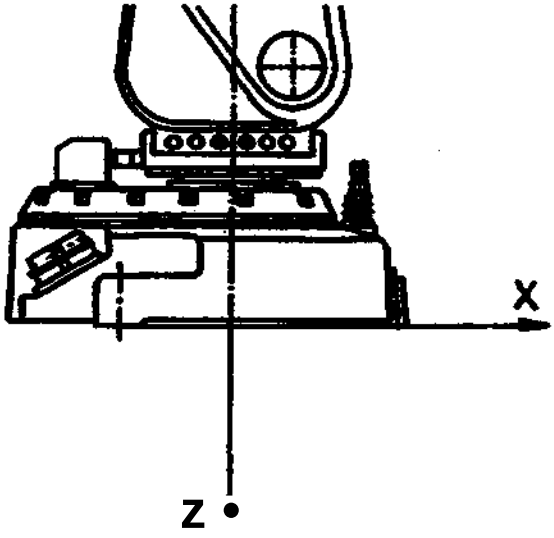

3.3
Suspended mounting

The method for mounting the robot in a suspended position is basically the same as for floor mounting.

With inverted installation, make sure that the gantry or corresponding structure is rigid enough to prevent unacceptable vibrations and deflections, so that optimum performance can be achieved.

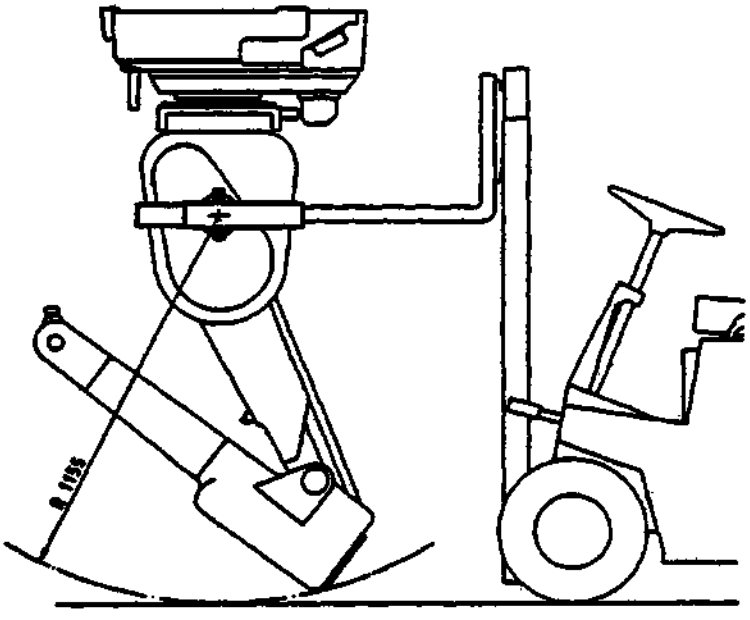

3.4
Required space

The required space, and working range are shown below. The working range of the axis 1(C) is ±179.9°.

NOTE! There are no software or hardware limitations for the robot working range closest to the robot base (see Description, IRB 2000).

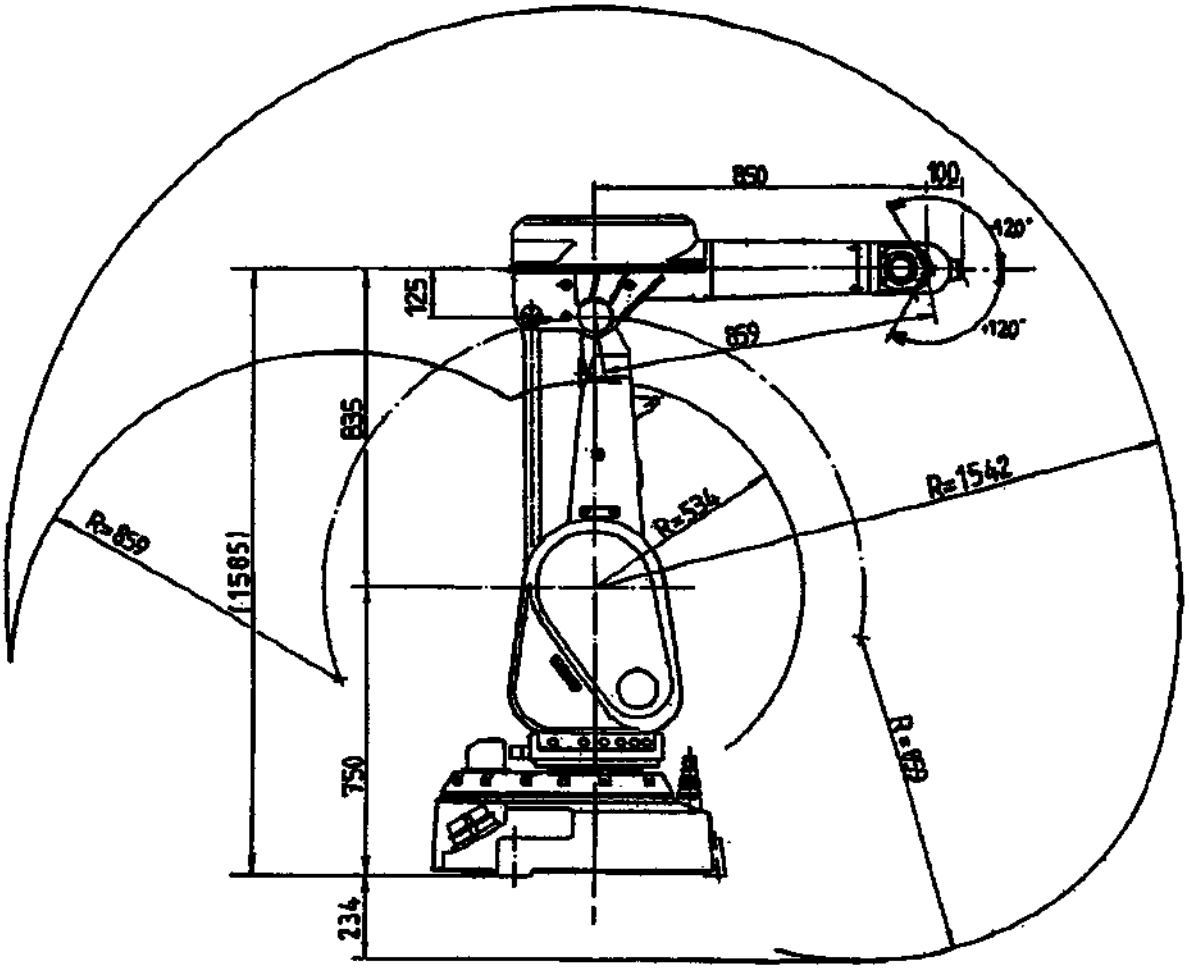

NOTE!
Centre line of axis 5.

4
MANUAL RELEASE OF BRAKES

Every axis of the robot has holding brakes. When positions of the robot axes are changed with the robot not connected to the control cabinet, an external 24 V DC power supply must be connected so that the robot brakes can be released. The power supply should preferably go to the connector in the base of the robot, see figure below.

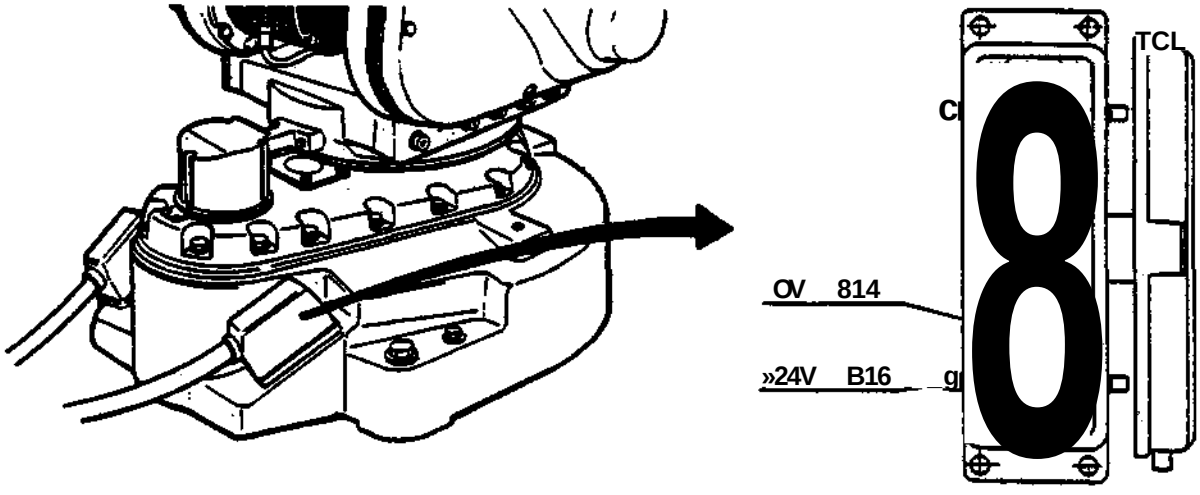

When the control system or the power supply mentioned above is connected, the robot axes can be released individually by pressing the corresponding button on the gearbox of axis 3. The buttons are marked with the relevant axis number. The illustration below shows the locations of the brake release button, the axis designations and motions.

WARNING! Be careful when releasing the brakes! The axes can very rapidly start moving, thus causing damage or injury!

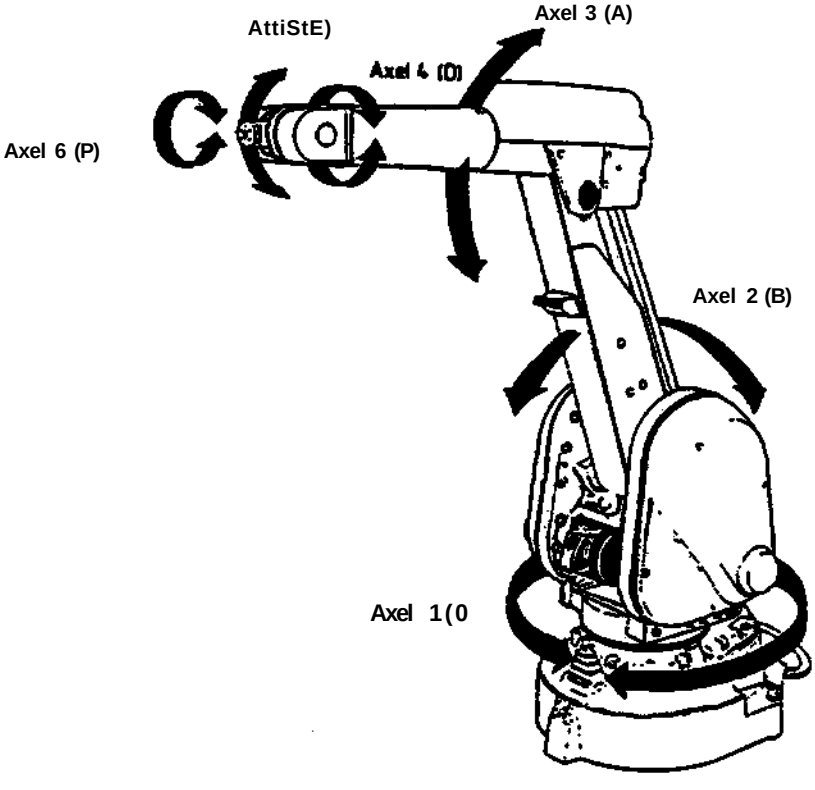

5
WORKING RANGE LIMITATIONS

When installing a robot, check that it can move freely within its working range. If there is any risk of the robot colliding with any obstacles, the working range must be limited. Limits shall be imposed in software and hardware. Instruction for limiting the working ranges of the main axes 1 and 2 and limit switch installed on axis 3.

5.1
Aarisl

Axis 1 normally operates within a rotational movement of ±179.9°. This area can be mechanically limited by fitting stops to the intermediate plate. These stops can limit the robot working range infinitely variable.

The fitting of stops are described in the erections provision delivered with the kit.

NOTE! The original stop must under no circumstances be removed!

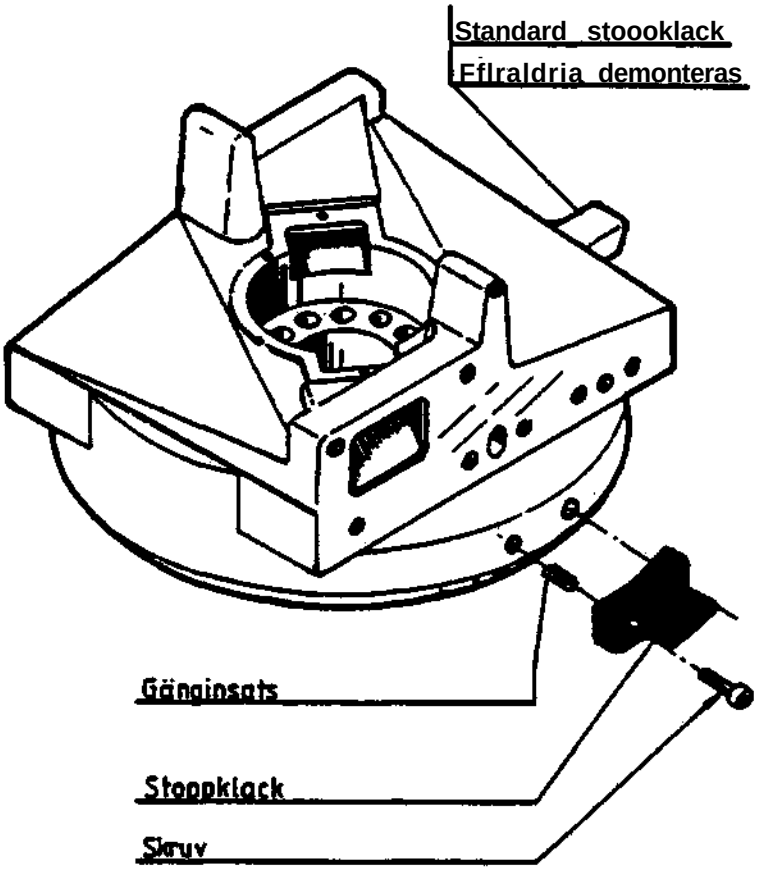

5.2
Axis 2

To limit the working range of axis 2 (in addition to the software limits), fit extra stops to the stop ring Gocated on the gearbox of axis 3). See figures below. The stops limit the arm movement by increments of 30° (30° =1stop, 60° = 2 stops etc.).

Fit the stop to the stop ring, using screws (M8 x 30).

NOTE! The edges of the stop are slightly tapered (casting draft angle), so they must be turned in the right way round for a snug fit on the surface of the stop ring. Additional stops can be fitted (by 30° increments) to achieve the desired limits.

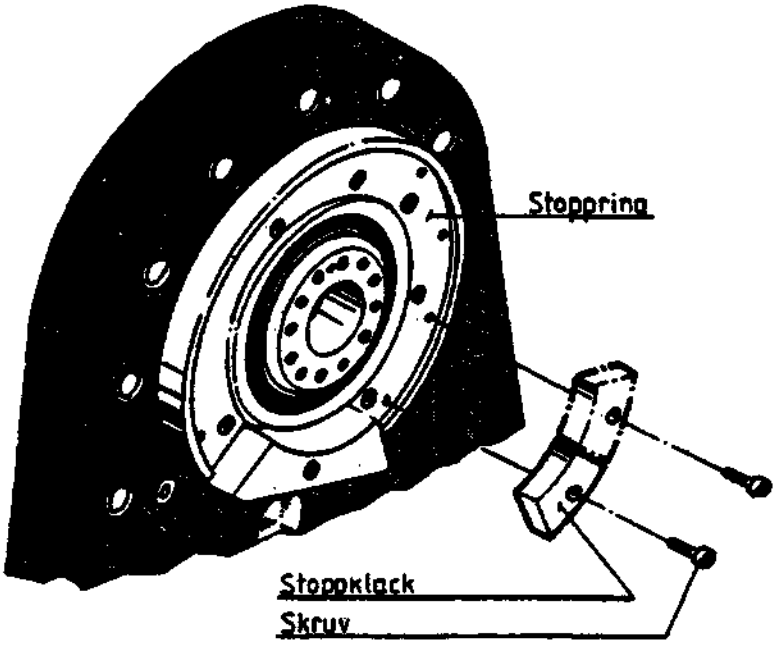

5.3
Axis 3

To limit the working range of axis 3 (in addition to the software limits), a disc for fitting switch activator segments and an electrical switch, sensing the position of these segments, are to be fitted to the outer side of the gearbox of axis 3. This is described in the erections provision included in the kit. Axes 3 limit in proportion to floor level.

When altering the mechanical limitation of the working range, remove the switch activator segment by removing the three screws holding it. Then refit the segment in a suitable position on the disc, giving the desired working range limitation. Secure the screws with LocTite 242 or corresponding. Also see the erections provision included in the kit.

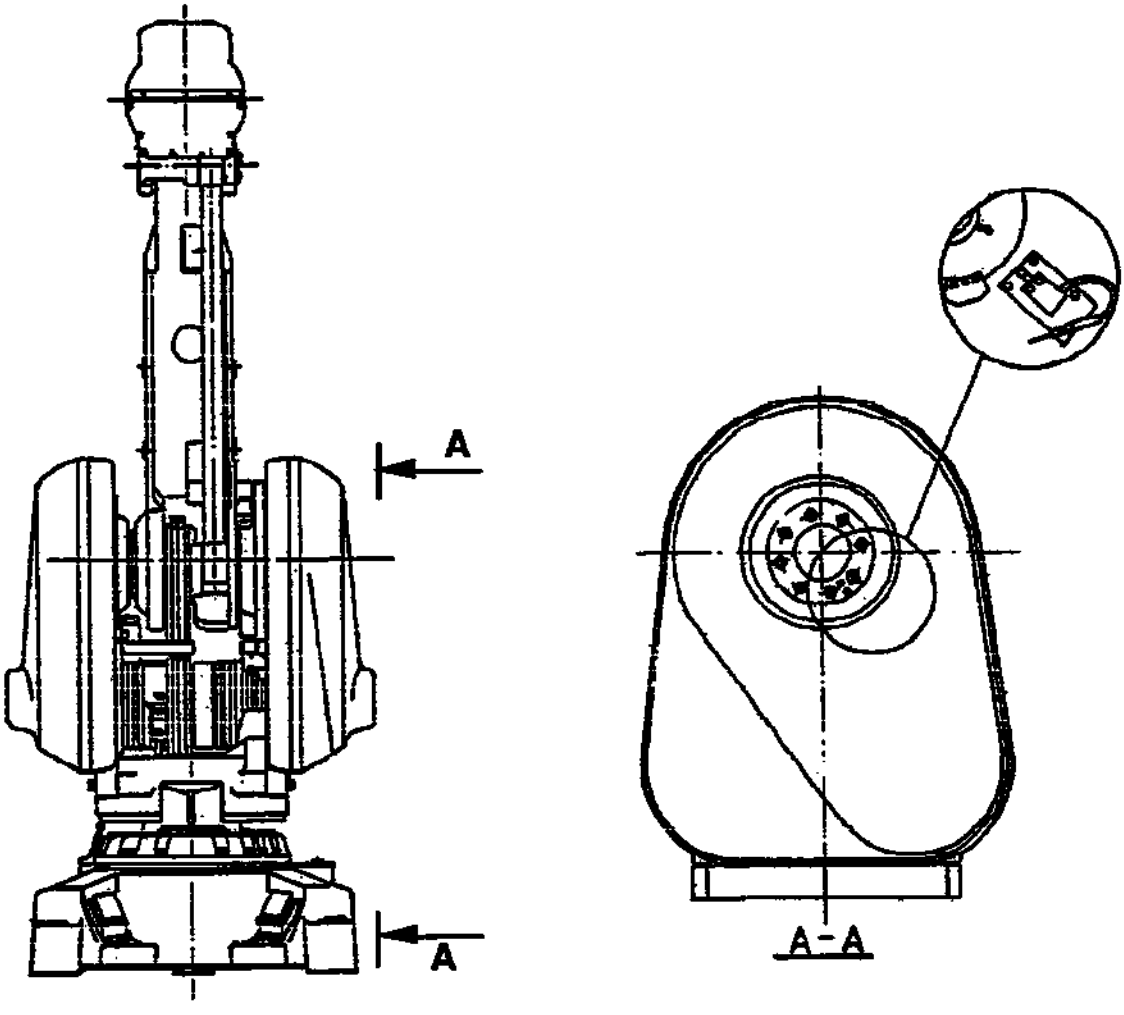

CUSTOMER CONNECTIONS

The robot is prepared for almost any customer connections. There is normally no need to make any fixing holes on the robot in addition to those already present.
Cables for customer connections are routed from the base of the robot to the rear part of the robot upper arm. The robot is thus (in its basic form) prepared for robot applications such as arc welding, gluing and sealing.
The figure below shows the fixing holes for customer applications (basic version), as well as air and electrical connections. Numbers in boxes indicate:

1 Customer connection Burndy round 12-pole plug UTG 014 -12 S (2x) (option).

2 Connection to air Rl/4".
Customer connection Burndy round 12-pole plug UTG 014 -12 S (lx) (option).

3 Hole for air connection inside R 3/8" Max 8 bar (option).

The connectors are connected according to the robot Circuit Diagram.

NOTE! Never drill holes in the robot without first consulting ABB Robotics service personnel or design department!

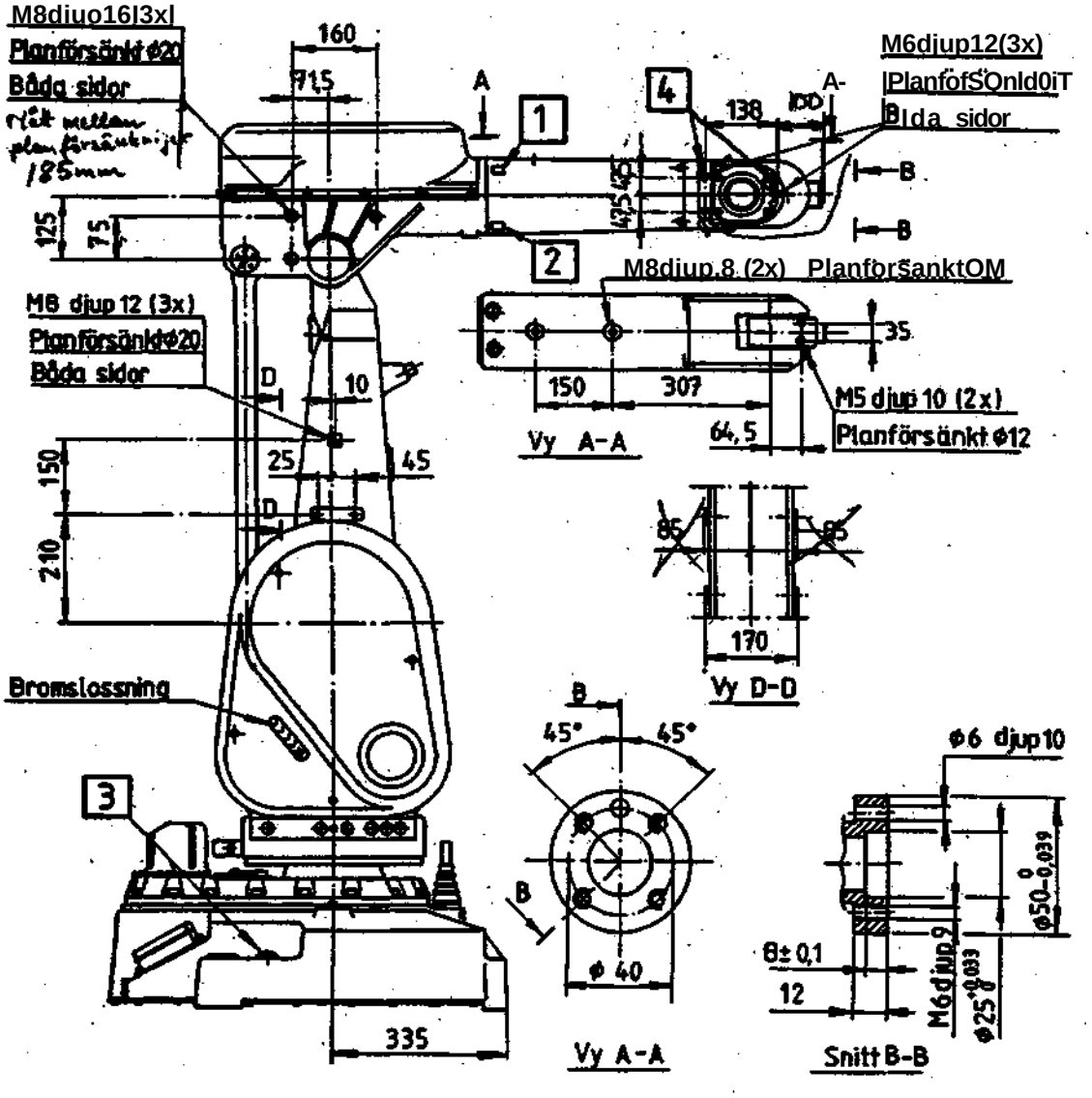

To connect to the power and signal conductors from the connection unit on the upper arm the following parts are recommended:

	Qty	ABB Article No.
-Plug connector for pins: Burndy 12- poles No.UTO 614 12PN04	one plug for the power connector and two for the signal connectors	3HAA 2602-2
-Adapter, Burndy 12-poles No. UTG 12AD	Same as above	3HAA 2601-2
-Shrink boot, Hellerman 12-poles No. 1103-4-B5/WM250	Same as above	5217 1032-4
Pin		
AWG26-24		5217 649-72
AWG22-20	*)	5217 649-70
AWG20-16		5217 649-68
Earth pin		
AWG26-24	*)	5217 649-10
AWG20-16		5217 649-31

*) No. of used power and signal connductors

7
CONNECTIONS TO THE CONTROL CABINET

Cables from the control cabinet are connected to the robot base with two connectors. The right-hand connector (as seen from behind) carries power to the motors etc., and the left-hand connector carries signals between robot and control cabinet. Detailed information about this is given in the Installation Manual of the control cabinet (Installation, S3).

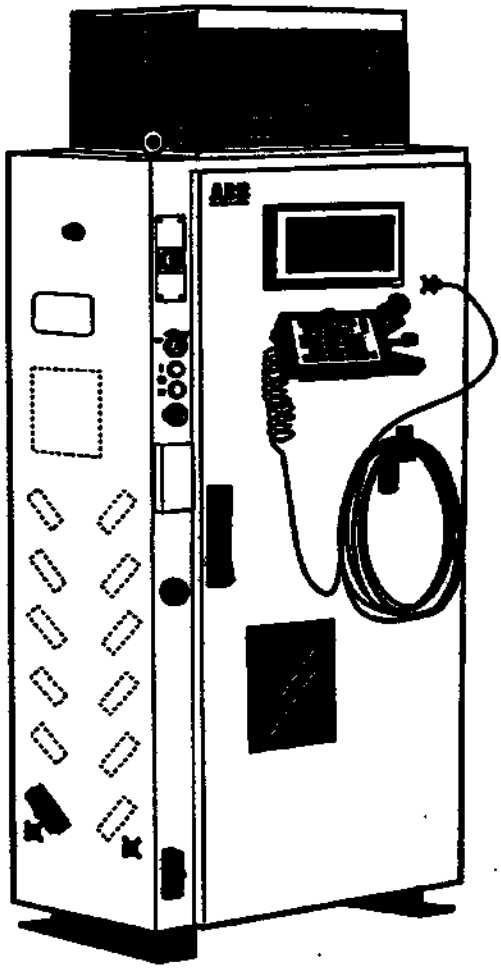

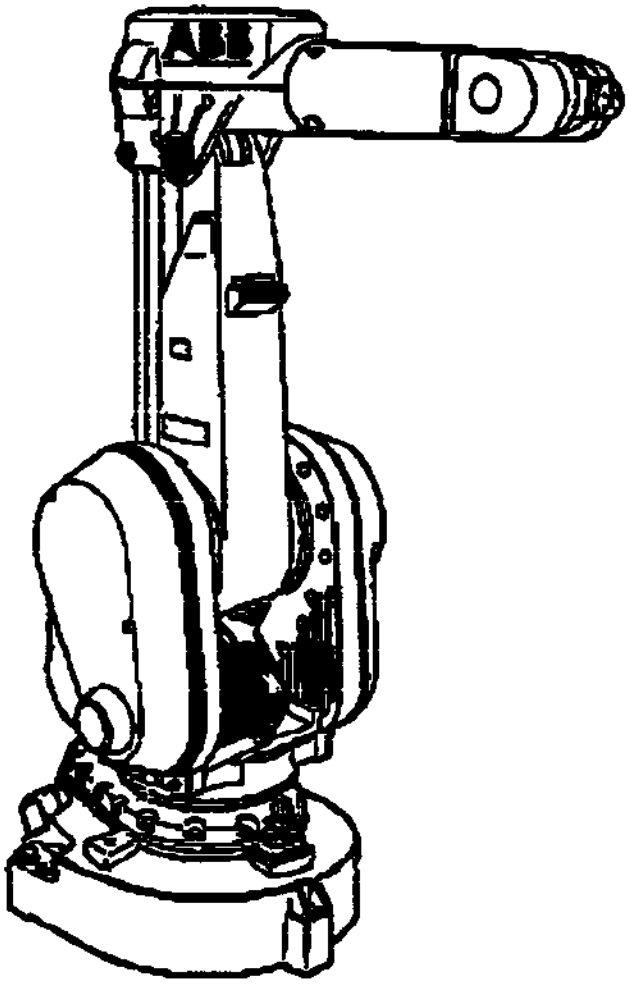

8
Calibration

8.1
Coarse calibration using the robot calibration marks

If error message 509 SYNC.ERROR XXXX or ROBOT NOT SYNCHRONIZED, the robot must be calibrated against the calibration mark of each axis on the robot. See figure on the next page.

Examples when the revolution counter is to be calibrated:
* when the battery unit is discharged
* after a resolver fault
* the signal between resolver and serial measurement board is interrupted
* some robot axes have been manually moved with disconnected control system

After approx. 18 hrs of operation, the accumulator unit is fully recharged.

If calibration of the resolvers must be performed, see Service Manual IR6 2000, Mechanical repair, chapter 9.

Observe caution when inside **he robot working range!**

Put the system in the MOTOR ON mode and run the robot manually, using the joystick, to a position where the calibration marks are within the tolerance zone, as shown in the figure on the next page.The axes are to be adjusted in increasing sequence, i.e. 1-2-3-4-5-6.

Axes 5 or 6 must not be manually moved before the robot is calibrated, to avoid that the resolver of axis 6 is calibrated on the wrong resolver revolution.
When calibration is performed as below, avoid to move axis 6 when axis 5 is moved to it's calibration position.

When all axes have been set according to the above, the revolution counter values are to be stored by giving the following commands on the programming unit:

• Note. Don't uppdate the SYNCPAR value.

MAN
SCAN
PARAM
RESOLV
COUNTER
UPDATE ALL COUNTERS? YES

Make a back up copy of the parameters on a diskette or similar by performing the following sequence:

MAN
SCAN
PARAM
TO DISK

After uppdate of the revolution counter check every time calibration position and drive a sutable calibration program.

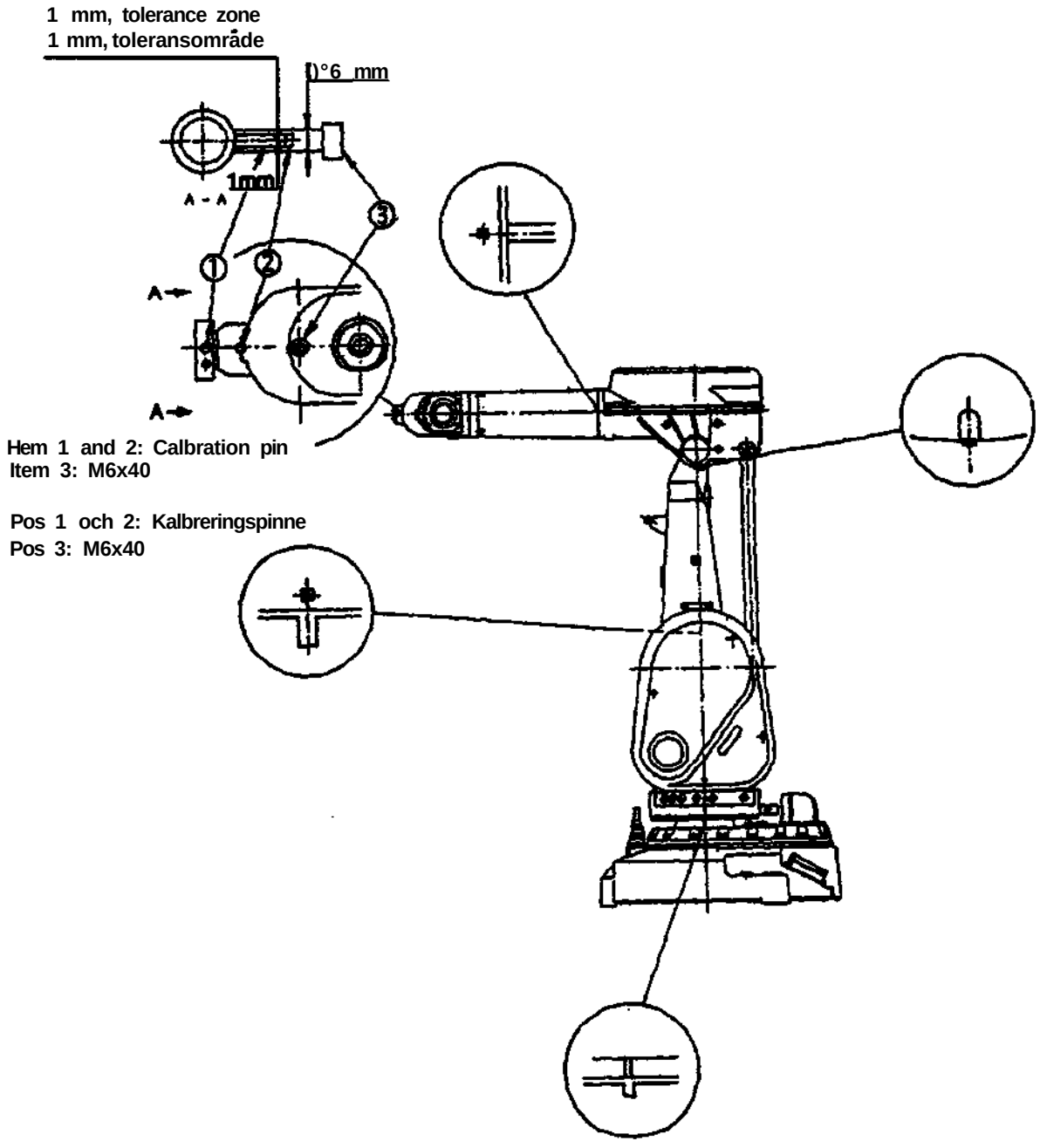
1 mm, tolerance zone
1 mm, toleransområde
)°6 mm
1mm
A - A
A
A
1
2
3
Hem 1 and 2: Calbration pin
Item 3: M6x40
Pos 1 och 2: Kalbreringspinne
Pos 3: M6x40

8.2
Alternative calibration positions

The robot must be calibrated at calibration position 0 before it can be calibrated in any of the alternative positions.
Use system disk to set the alternative calibration positions according to the following:
Block 10 contains program without external axis. Block 20 include external axis.

1KB 2000:

program	2000	calibration position	0
program	2001	calibration position	1
program	2002	calibration position	2
program	2003	calibration position	3
program	2004	calibration position	4
program	2005	calibration position	5

Note that the setting of the alternative calibration positions must be done before the installation of the robotsystem if the final installation prevents that calibration position 0 is used.

The different alternative calibration positions are described in the Installation Manual of Control System S3. After setting any of the above alternative calibration positions, the revolution counter value is to be stored by giving the following commands on the programming unit:

MAN
SCAN
PARAM
RESOLV
SYNCOFF
Select axis
UPDATE (write down on calibration label)
NEXT
UPDATE (counter)
.
.
.
BREAK
ACTIVE

Make a back up copy of the parameters on a diskette or similar by performing the following sequence:

MAN
SCAN
PARAM
TO DISK

Update also the parameter for the synchronization position according to Installation Manual S3.

Axis	Calibration position (see figure below)					
	0	1	**2**	**3**	**4**	**5**
1	0°	-90°	+90°	0°	-90°	+90°
2	0°	0°	0°	-90°	-90°	-90°
3	0°	0°	0°	(-90°	-90°	-90°)

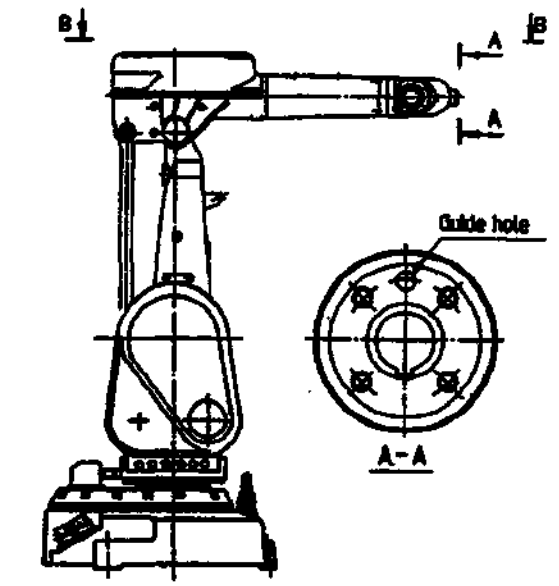

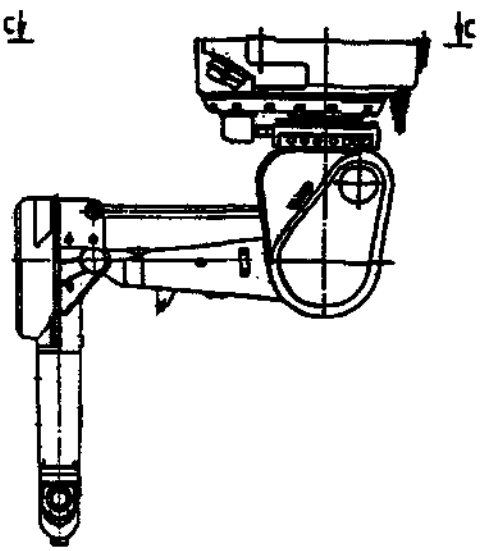

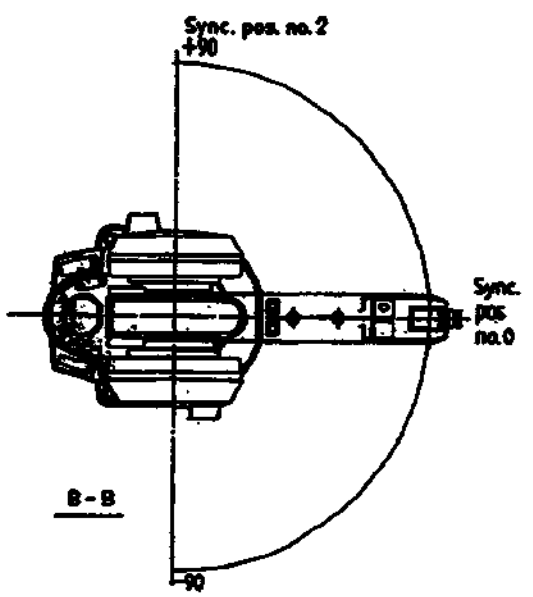

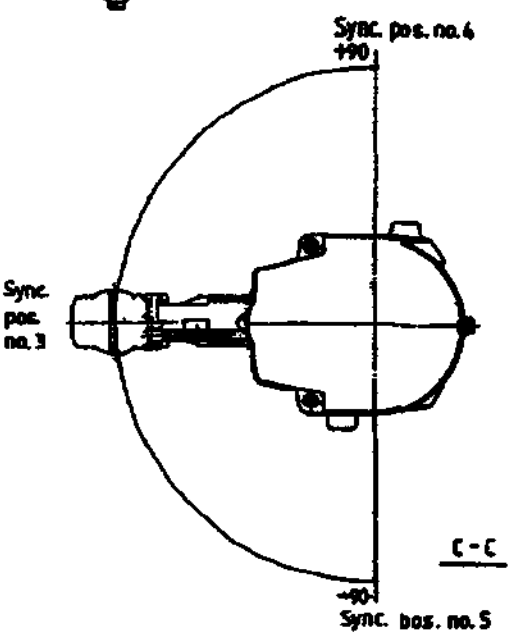

Sync, pocnai·

8.3
Check of calibration positions

Use system disk to check the calibration positions. Select calibration program according to section 8.2. Start the program and switch the robot to the STANDBY mode when it has been calibrated. Check that the calibration marks align with eachother. At check, with the electrical inclination instrument, should the result be within ± 0.5 mm/m, using the systemdisc.

9
RUNNING THE ROBOT

Starting and running the robot system are thoroughly described in the Programming Manual. Before starting the robot check that there is no danger of the robot running into any obstacles, especially if the robot system is equipped with external axes (track motion or similar).

INSTALLATION
Robot control system S3

3HAB 0003-8
January 1993/M93

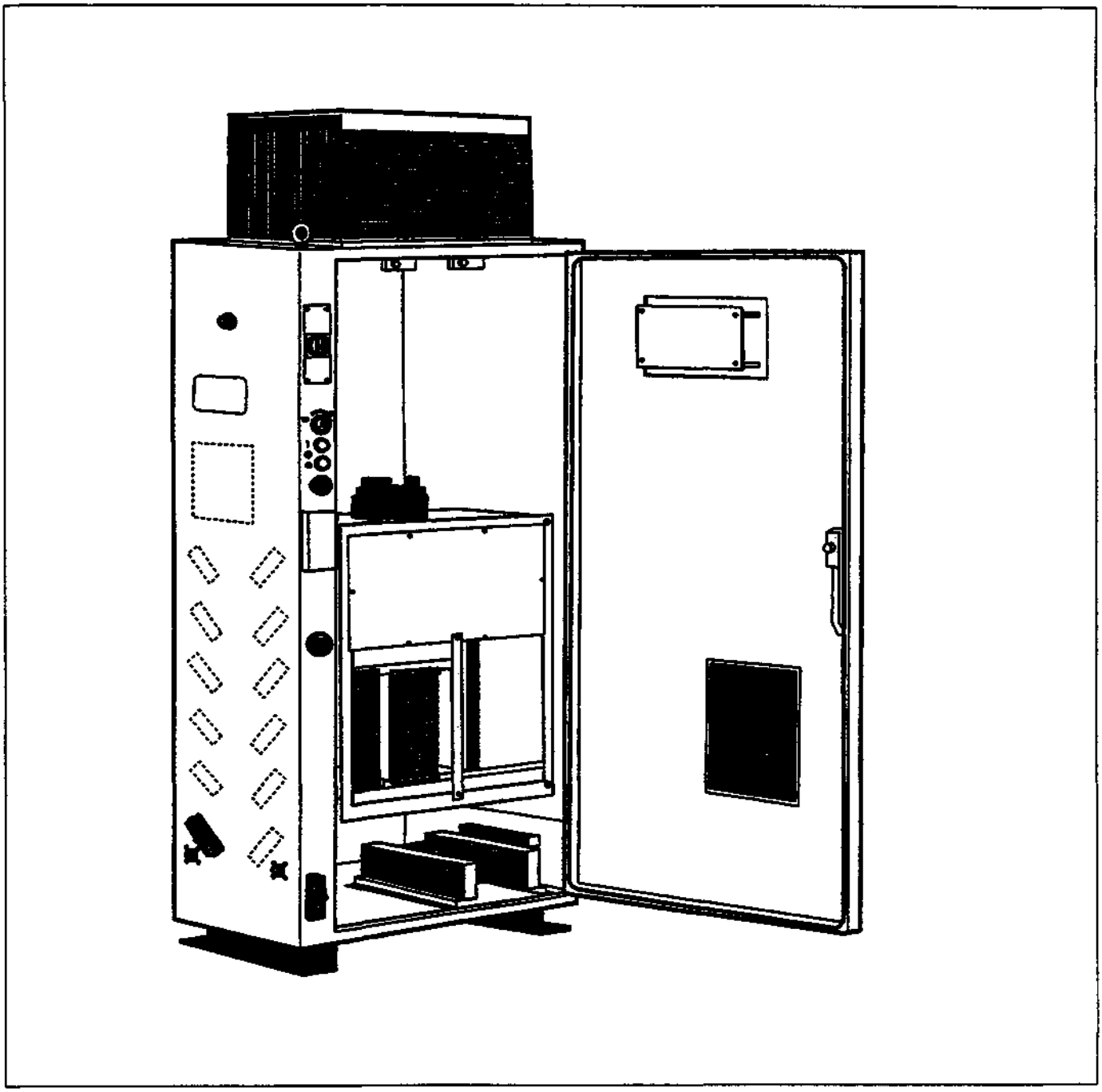

ABB Robotics Products

ASEA BROWN BOVERI

Article number: 3HAB 0003-8
Issue: January 1993

ABB Robotics Products AB
S-721 68 Västerås
Sweden

CONTENTS Page

1
SAFETY - INSTRUCTIONS AND RECOMMENDATIONS

See separate document in the Product manual.

2
ENVIRONMENTAL REQUIREMENTS

The space occupied by an S3-control system is shown in the figure below.

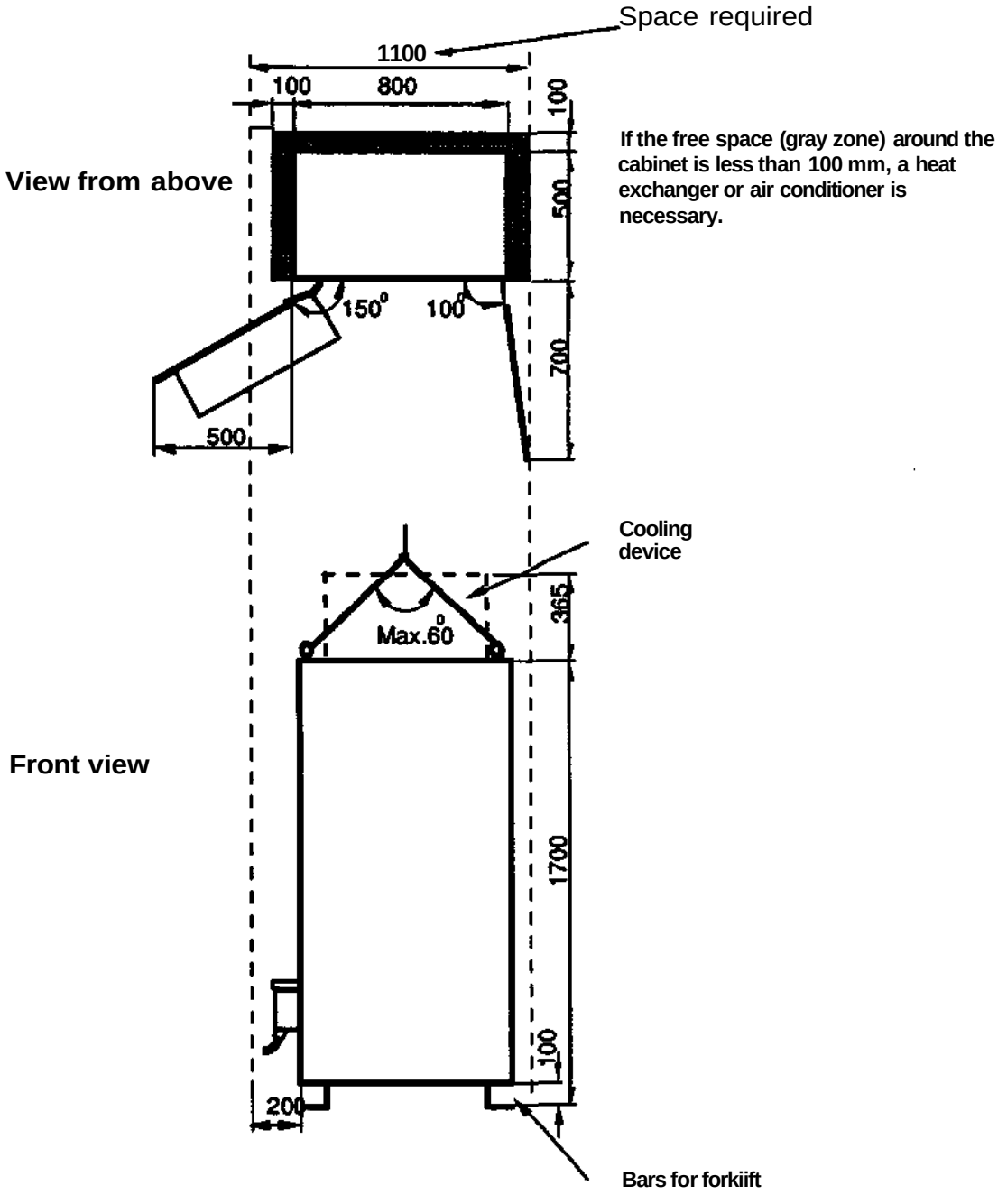

Ambient temperature for control cabinet incl. programmig unit and disk drive, without auxiliary electronics installed: **+5° C - +40° C**

Relative humidity: **Max 90 %**

The cabinet enclosure protects against dust, splashing water from any direction and contact with live parts. Degree of Protection rating is IP 54 in accordance with IEC 144 and IEC 529. The cabinet is designed to fullfil the requirements of NEMA 12. Avoid however spraying the control cabinet with water or other liquids.

The control cabinet and its contents withstand shocks due to the normal transport.in accordance with IEC 68-2-6, IEC 68-2-29. If the floor on which the cabinet is to stand permanently is subject to vibration, the cabinet should be mounted on shock-absorbing vibration dampers.

If the plant has a history of extreme mains power transients and interference voltages, an isolation transformer or an interference suppression device should be installed.

3
CONNECTION OF SIGNALS

To avoid damage by ESD (Electrostatic Discharge) always wear the (grounded bracelet when handling electronic components.

3.1
Signal classes

The signals to the control cabinet are of four classes.
Power - drive voltage for electrical motors.

Control signals - digital operation and data signals (digital I/O, emergency stop, General (mode) stop etc).

Measuring signals - analog measurement and control signals (resolver, (except for and analog I/O).

Data communication signals - (printout, computer link, panel cable to externally installed operator's unit).
For the different classes it's different rouls for cables and cables extension. Signal from differnt classes are not allowed to mixed.

3.1.1
Cable selection

All of the cables in the control cabinet must withstand an ambient temperature of 70° C ambient temperature. The following rules also apply to cables for signals of certain classes:

Power supply - screened cable with smallest area 0.75 mm* or AWG18.
Note that local standards which apply with respect to insulation and conducting area must be complied with.

Control signals - screened cables.

Measurement signals - screened cable with twisted pairs.

Data communication signals - screened cable with twisted pairs.

3.1.2
Routing

Power signals - these signals cause high disturbance and are to be contained in a separately screened cable. The screening is to be clamped against a surface free of paint on the steel frame of the cabinet.

Control signals - These signals are not very sensitive. However, they should not be routed side-by-side and parallel with non-screened switched-power cables. When screened cable is used, should the screen be connected direct to the chassis with help of a steel bracket.

Measuring signals - these signals are very sensitive to disturbance. To protect these signals the cable should not be located closer to power signals than 30 cm. In the cable each signal is to be twisted with a neutral conductor. The screening is to be connected to the body of the cabinet using a steel clamp.

Data communication signals - these signals are very sensitive to disturbance. To protect these signals, the cable should not be located closer to power signals than 30 cm. Each signal in the cable should be twisted with a neutral conductor. The screen should be connected to the body using a steel clamp.

3.1.3
Interference suppression

Relay coils and other units in the control system which could cause interference are suppressed so that their operation does not interfere with the control system.

Relay coils, conductors and motors connected to the system should be suppressed in a corresponding way. The figure below shows how this can be done.

Note that the operating time of a DC- relay increases when the relay is suppressed, particularly when a diode is connected in parallel with the coil. A varistor give a shorter realeasing time. Diodes and RC-filters can be replaced with varistors.
A varistor gives a shorter delay.The suppression of coils also extends the service life of the switches which control the coils.

Examples of how to suppress peripheral equipment connected to the robot system

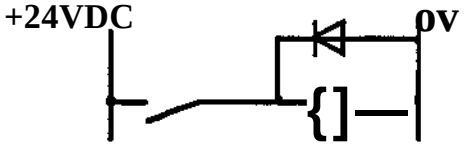

The diode is to be dimensioned for the same current as the relay coil, and a voltage of two times the supply voltage

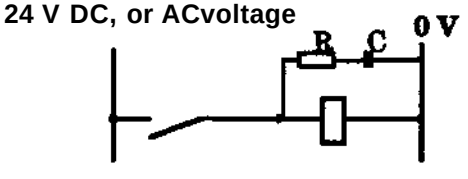

R 100 ohm, 1W
C 0.1-1 nF
> 500 V max voltage
125 V nominal voltage

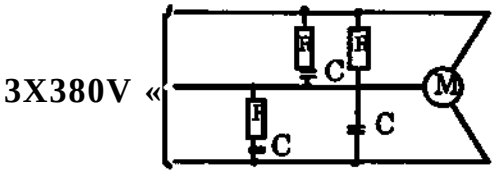

R 100 ohm, 2 W
C 0.5 nF
> 1000 V max voltage
> 420 V nominal voltage

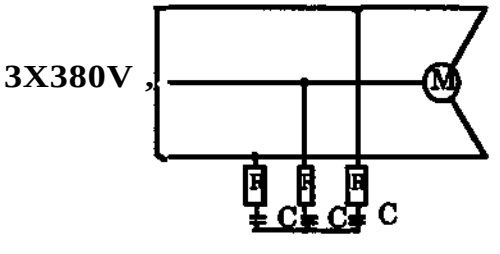

R 100 ohm, 1W
C 0.5 µF
< 1000 V max voltage
> 250 V nominal voltage

3.2
Terminal Connections

Terminals for connection of customer I/O, external safety circuits etc can be supplied as industrial connectors, as screwed terminals.

The connector is designated with XP when the equipments are pins and XS when sleeves. Screw connections is designated with XT.

3.2.1
Connection to connectors

Connectors are located on the left hand side of the control cabinet for the user's connections.
These may be of two different types:

1. Industrial connectors, DIN 43652, with 4 x 16 poles for contact pressing.
2. Multipole type connectors with 12 poles for contact pressing or soldered connections.

The following applies in general for connection of signal cables:

Fold unused conductors backwards and fix to the cable with cable ties. Check that the conductors are not connected at the other end of the cable to avoid interference (aerial effect or cross talk). If there is risk of interference, unconnected conductors should be connected to ground (0 V).

The following applies when contact pressing connections in and industrial connectors:

A crimp contact is pressed on each stripped conductor with a special tool. The pin can then be snapped into the connector itself.

A special extration tool is used to remove a pin from the connector.

When two conductors must be connected to the same pin, both conductors are pressed in the same pin. A wm*iTmiTn of two conductors should be pressed into one pin.

When soldering in multipole connectors, care must be taken to obtain first class soldering.

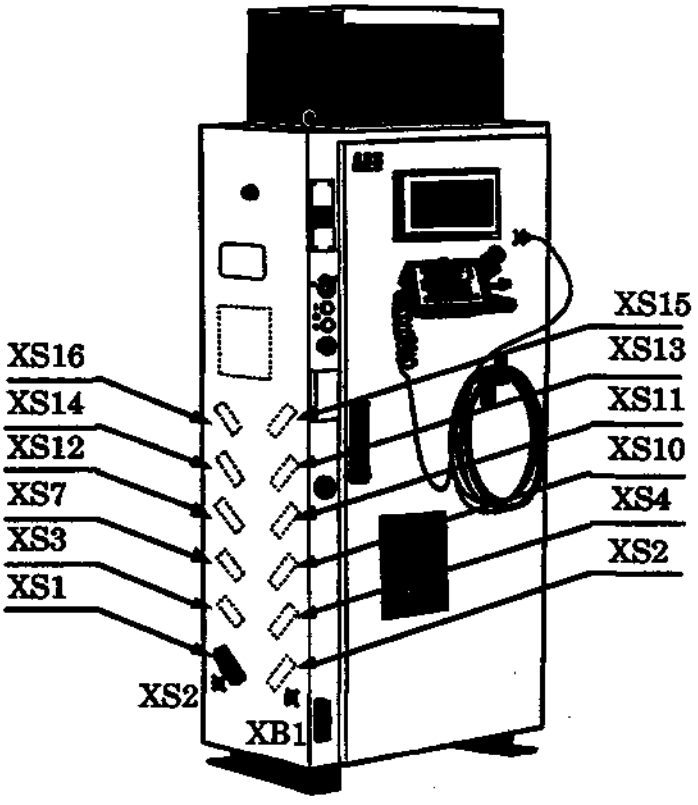

Industrial connector, plug with 4 x 16 pin for contact pressing

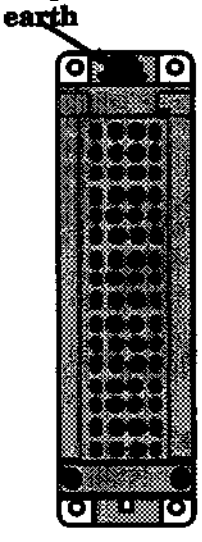

Equipment necessary Article	Article No. ABB		Article No. Amphenol
Industrial connector, plug	5217 687-24	*	C146 10A064 000 2
Hood	5217 687-21	*	C146 10G064 502 2
Keying	5217 687-9	*(2)	VN17 050-0004
Pin, conducting area 0.14 - 0.5 mm^2	5217 1021-1	*(100)	VN17 016-0003
Pin, conducting area 0.5 -1.5 mm^2	5217 1021-2	* (100)	VN17 016-0002
Contact pressing tool	6893 153-2		
Extractor	6893 153-4		

* part of YB 501101-DP

Facts
The connector accomodates 4 rows of 16 conductors with a maximum conducting are 1.5 mm^2. The screen must be fixed with the upper part of the connector. All industrial connectors in the customers cables are pin connectors, the cabinet are deliveryed with housing connection.

Multipole-connector

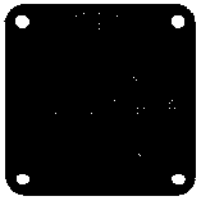

Equipment necessary Article	Article number ABB	Article number Burndy
12-pole multipole connector	3HAA 3016-1	UT 06 PG1823 P04T
Crimping pin, area 0.25 - 0.5mm^2	5217 649-3	RM 20 M12 K
Cable clamp for above	2671125-2	-
Soldering pin, area 0.25 - 0.5 mm^2	5217 649-90	RM 20 SE OK

Facts

The contact is available for connection of optional computer link.

The leads are soldered or crimped to the pins on the rear of plug.

3.2JJ.1
Connection to screwed terminals (option)

Screwed terminals can be provided on the rear inner wall of the cabinet for connection of customer I/O,and safety stops.

Screwed terminal	Connector terminal	Signal identification
XT 3	XS/XP3	Safety stops, 24 V, sensor etc
XT 11	XS/XP11	Digital I/O 1
XT 12	XS/XP12	Digital I/O 2
XT 13	XS/XP13	Digital I/O 3
XT 14	XS/XP14	Digital I/O 4
XT 15	XS/XP15	Digital I/O 5
XT 16	XS/XP16	Digital I/O6
	XS/XP7	External axes
XT 10	XS/XP10	Analog I/O
	XS/XP4	External axes

Example of the terminals on the rear wall of the cabinet is shown below.

Incoming cables to the screwed terminals must be screened. The cables can be drawn through a flange on the left side of the cabinet (the screen must be connected with the inlet) which has a series of 12 knock-outs with diameter 23 mm, or can be brought in through the roof plate by drilling holes for suitable cable glands. The finished installation should fulfill form of protection IP54 (NEMA12).

Inside rear wall of cabinet

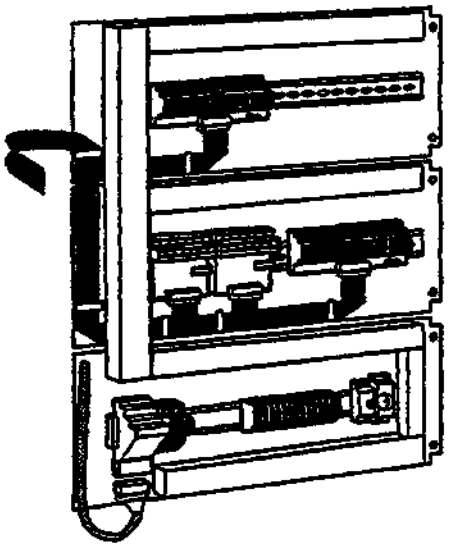

3.2.2.2

Free ends (option)

The option is used for connection to a customer designed relay or I/O interface.

- Customer connections (XS3).
  A 64-pole female industrial connector, DIN 43652 is available in the cabinet rear wall.
- I/O-connectors are 40-pole ribbon cable connectors, length enough to reach cabinet rear wall.

3.3

Connection, control cabinet - robot

The robot is connected to the control cabinet via two cables, one cable for measurement signals and one cable for the motor drives.
The measurement and motor cables are connected to the left-hand side of the control cabinet at one industrial type connector and one Burndy-type connector. The measurement and motor cables are connected to external contacts at the rear of the robot base

See following figure:

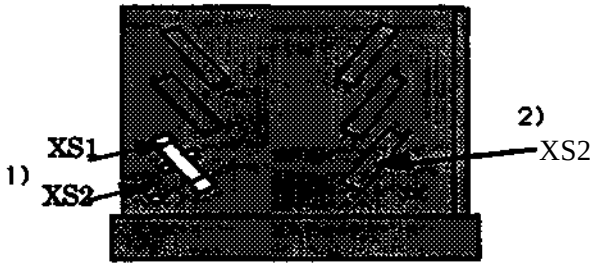

1) XS2 It's for 1KB 6000, IRB2000M93A and **IRB** 3X00 M93A

2) XS2 It's for IRB 2000 M93 and IRB 3X00 M93

CONNECTIONS

Motor drives cable	RX.1MP- XP1 IRB 6000
Measurement signal cable	R1.SMB-XP2 IRB 6000

3.4
MOTOR ON/MOTOR OFF CIRCUIT

To get allowance for MOTOR ON conditions, two identical chains of switches have to be closed.
Any switch opening will cause MOTOR OFF. Any difference in the two chains will maintain the MOTOR OFF condition.

The principal for one. circuit with possible customer connected switches AS, MS, GS and ES is shown in figure below.

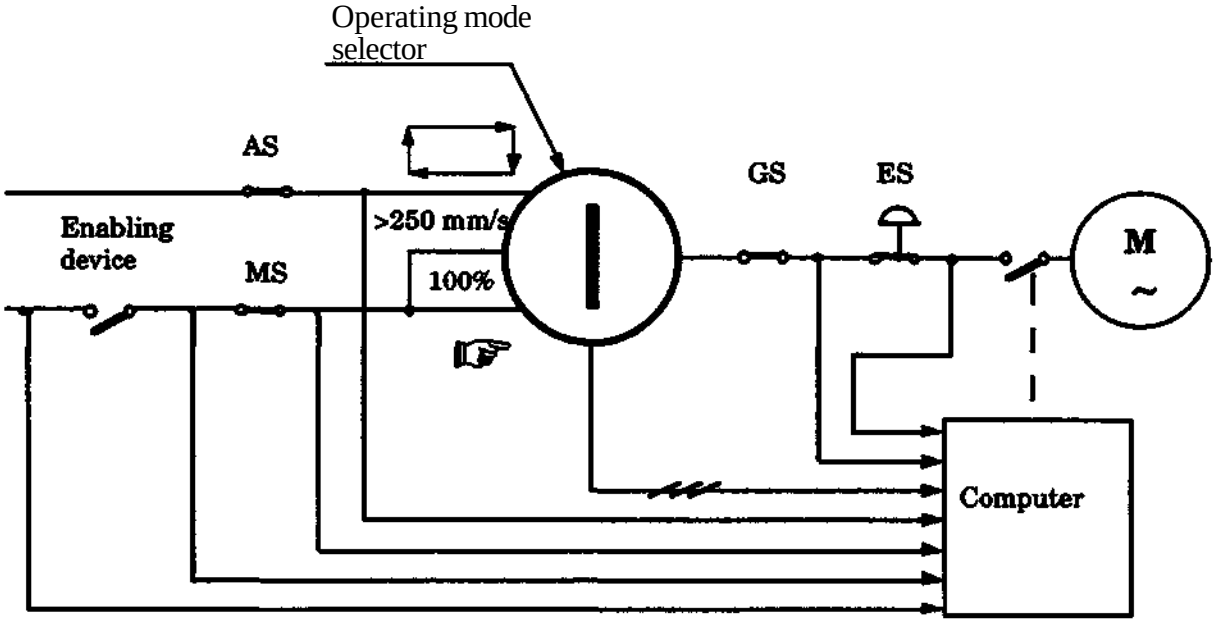

AS	Automatic mode safeguarded Stop
MS	Manual mode safeguarded Stop
GS	General mode safeguarded Stop
ES	Emergency Stop

3.4.1
Connection diagram

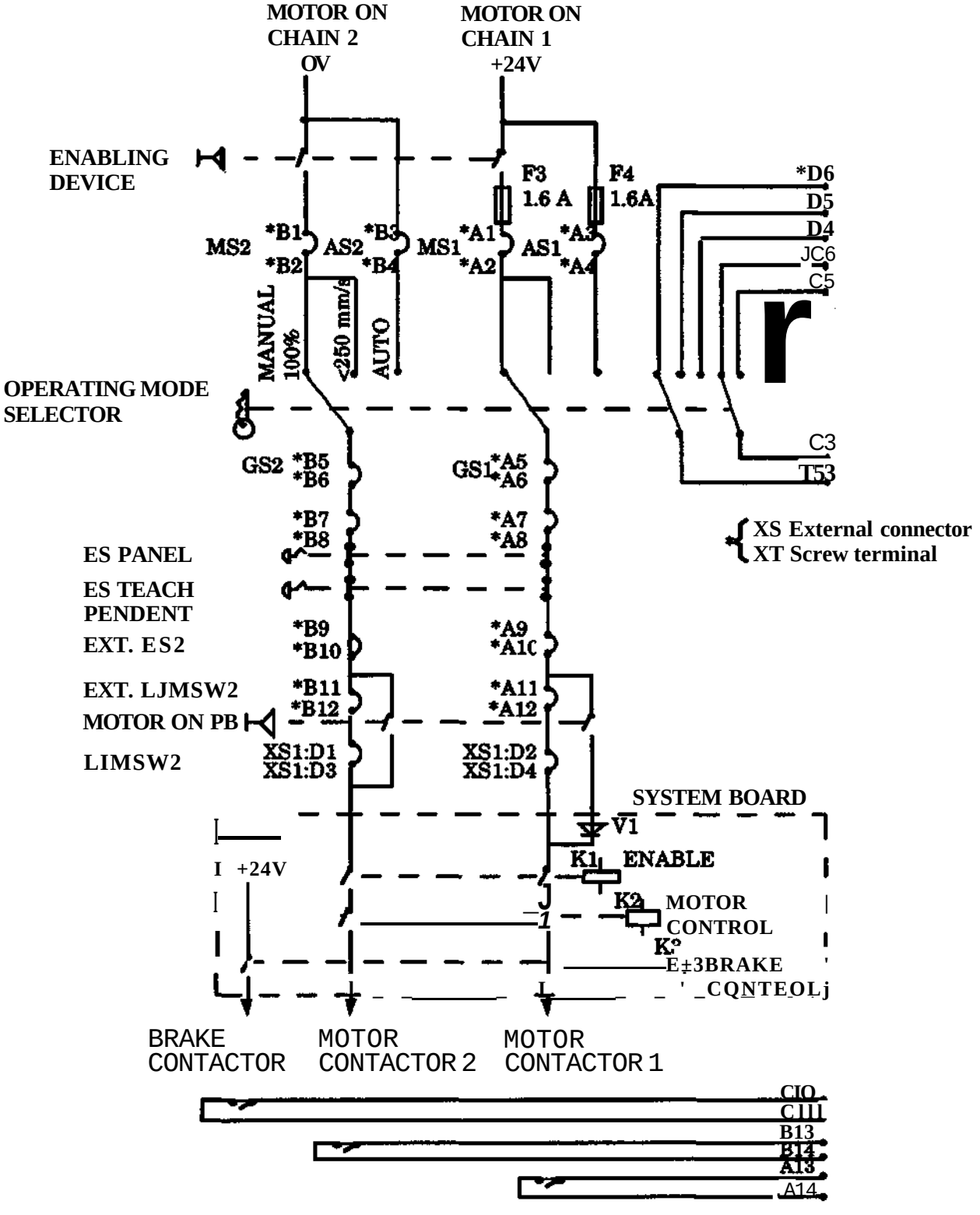

3.4.2
Connection tables MOTOR ON/MOTOR OFF operating circuits.

Users connector: XS3 or XT3.
Signal names refer to the detailed circuit diagram in S3 Service Manual.

Signal name	Terminal	Note
ENDEVB	A1	Manual Stop 1
MSTOP1	A2	Manual Stop 1
ENDEV-N	B1	Manual Stop 2
MSTOP2	B2	Manual Stop 2
24V SYS	A3	Auto Stop 1
ASTOP1	A4	Auto Stop 1
OV	B3	Auto Stop 2
ASTOP2	B4	Auto Stop 2
GSTOP1A	A5	General Stop 1
GSTOP1B	A6	General Stop 1
GSTOP2A	B5	General Stop 2
GSTOP2B	B6	General Stop 2
GSTOP1B	A7	E-stop buttons 1
ES1C	A8	E-stop buttons 1
GSTOP2B	B7	E-stop buttons 2
ES2C	B8	E-stop buttons 2
ES1A	A9	Ext E-stop 1
ESTOP 1	A10	Ext E-stop 1
ES2A	B9	Ext E-stop 2
ESTOP 2	BIO	Ext E-stop 2

Note. A7-A8, A9-A10, B7-B8, B9-B10 have to be jumpered for proper function of control system's E-stop buttons.

ESTOP 1	A11	Ext limit switch 1
EXTUM1	A12	Ext limit switch 1
ESTOP 2	B11	Ext limit switch 2
EXTLIM2	B12	Ext limit switch 2
MOFF HOLD 1A	C1	*
MOFF HOLD IB	C2	*
MOFF HOLD 2	D2	*
OV	D2	*

* Open circuits will lock the robot in MOTOR OFF. If this function is not used, C1-C2 and D1-D2 must be jumpered.

3.4.3
Technical data MOTOR ON / OFF operating circuits.

Supply voltage	24V from control system
Circuit current	300 mA
Max allowed total circuit resistance	10 ohm
Signal class	Control signals

3.4.4
Connection tables external signals

Users connector: XS3 or XT3.

Signal name	Terminal	Note
EXT MODE COMMON 1	C3	External using of operating
EXT AUTO 1	C4	mode selector
EXTMAN1	C5	Chain 1
EXT MAN FS	C6	
EXT MODE COMMON 2	D3	External using of operating
EXT AUTO 2	D4	mode selector
EXT MAN 2	D5	Chain 2
EXTMANFS2	D6	
EXTMON1A	A13	Motor contactor 1
EXT MON IB	A14	Motor contactor 1
EXTMON2A	B13	Motor contactor 2
EXT MON 2B	B14	Motor contactor 2
EXT BRAKE A	CIO	Brake contactor
EXT BRAKE B	C11	Brake contactor

3.4.5
Technical data, external signals

Max voltage	48 V DC
Max current, BRAKE	9A
Max current, others	4A
Max potential in relation to control system earth	400 V
Signal class	Control signals

3.4.6

External safety relay

The emergency stop buttons in the control system can operate together with external emergency stop buttons using an external safety relay.

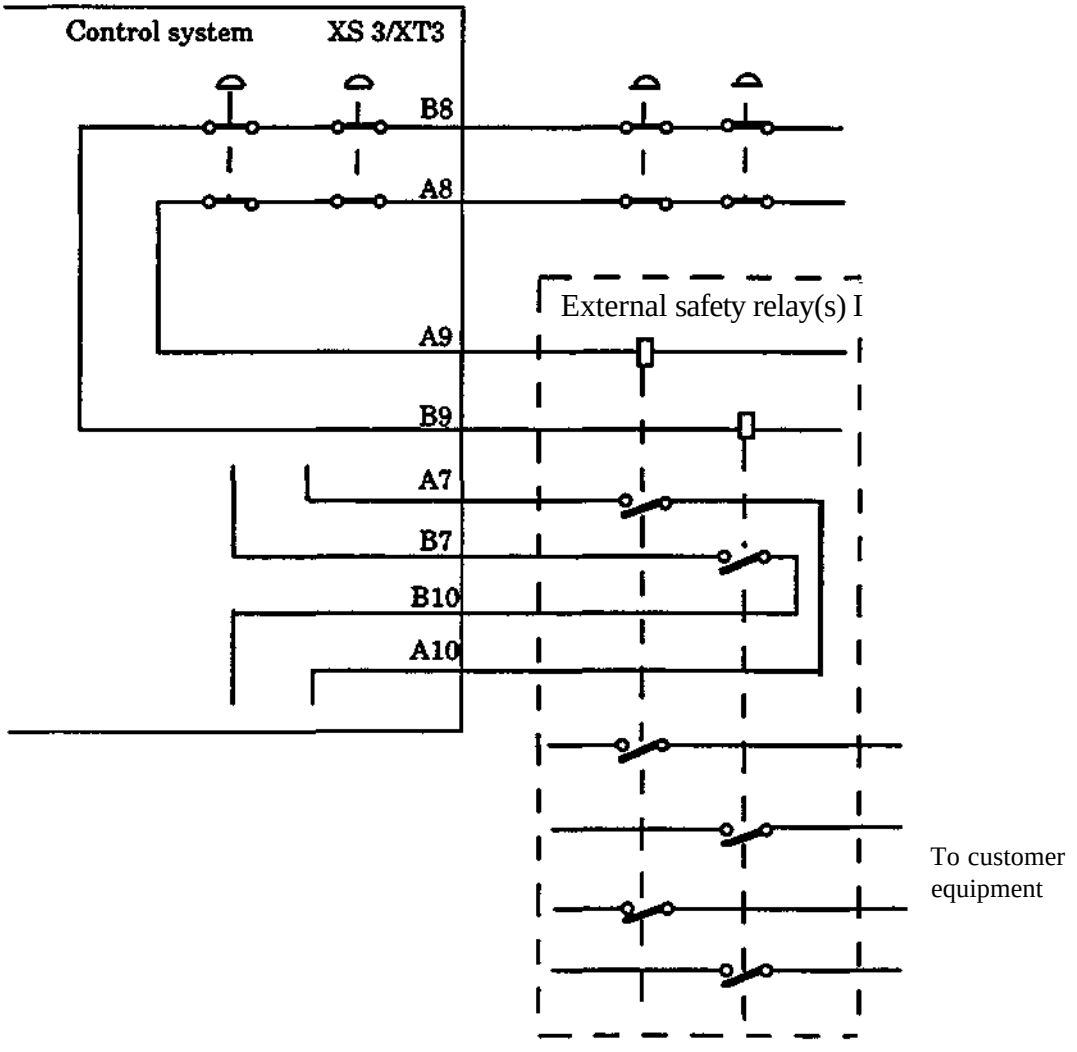

3.5

Safely stopsignals

According to safety standards, such as ISO/DIS 11161 "Industrial automation systems - safety of integrated manufacturing systems - Basic requirements" there are two categories of safety stops as follows:

Category 0 stops shall be used when a safety analyze requires immediate removal of power, e.g. when light curtains are used as entrance protection. The uncontrolled movement stop may need special restart action due to possible deviation from the programmed path.

Category 1 is preferred, when acceptable in a safety analyze e.g. when gates are used as entrance protection, since the controlled movement stop within the programmed path simplifies restart.

In the S3 control system all safety stops are of category 0.
A category 1 safety stop is achieved by using the HOLD 1,2 function together with AS orGS.

3.5.1

Category 1 safety stop (soft stop)

HOLD 1 and HOLD 2 connected to gate closed contacts supplied by 24V will at contact opening order PROG STOP and short there after two relay contacts are opened. These relay contacts can be connected in any of the MOTOR ON / OFF user switch positions. AS or GS are preferred.

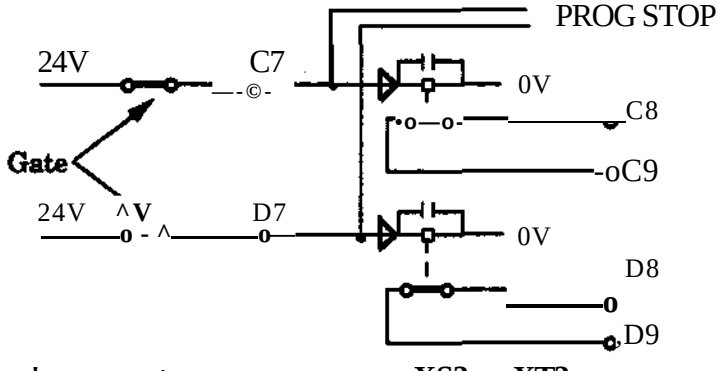

User's connector: **XS3 or XT3**

Signal name	Terminal	Note
HOLD 1	C7	
HOLD 11	C8	
HOLD 12	C9	
HOLD 2	D7	
HOLD 21	D8	
HOLD 22	D9	

Technical data.

Delay time (24V from control system)	1.5 sec
Signal class	Control signals

Note. To resume program running after interrupt by HOLD 1,2, gate contacts should be closed. Then by setting AUTO INPUT (see chapter3.10.4), the robot will go to MOTOR ON automatically followed by PROG START.

3.6
Voltage supply to electronics

The system is provied with a 24 V supply for internal use, 24 V I/O.

3.6.1
24 V **I/O**

This voltage is used internally for the robot brakes supply, and MOTOR ON circuits. It's OV is common to other electronics supplyin the control system.

Techical data

Voltage	24,0 V-26.4 V
Ripple	max. 0,5 V p-p
Permitted user load	max. 4 A
Current at shortage	max. 5 A (average value)

Voltage is available to the user in accordance with the following connection table:

	User's connector: XS3 eller XT3		**User's connector: XT18**
Signal name	**Terminal**	**Signal name**	**Terminal**
24 V I/O	A15,B15	24V I/O	13,14,15,16
24 V I/O	A16.B16	24V I/O	29,30,31,32
24 V I/O	C16		
0VI/O	C14,D14	0VI/O	5,6,7,8
0VI/O	C15.D15	0VI/O	21,22,23,24
0VI/O	D16		

3.6.2

External supply

External supply is to be used in the following cases:

- The internal supply provides too little current.
- Galvanic isolation is necessary because of the risk of interference through ground currents.
- Galvanic isolation is necessary because of the difference in potential between the control signal and the chassis ground.
- Galvanic isolation is required for reasons of safety.
- Risk of the transmission of considerable interference into the internal 24 V supply.

External supply is recommended to utilize the the galvanic isolation of the I/O-boards.

This could result in disturbances in the normal operations of the control cabinet.

The zero of the external supply must be connected in such a way that the maximum permissible potential difference between the zero and chassis ground is not exceeded i.e. by connecting a zero conductor to the chassis ground or some other common grounding point

Technical data:

Potential difference to chassis ground:	max. 60 V continously max. 500 V for 1 minute
Permissible supply voltage:	19 - 35 V including ripple

3.8
Connection of user equipment on the manipulatom (option)

Techincal data for user connection

Power supply

Conductor resistance	< 0.5 ohm, 0,241 mm^2
Max voltage	250 VAC
Max current	2 A

Signals

Conductor	< 3 ohm, 0,154 mm^2
Max. voltage	50 VAC/DC
Max. current	250 mA

Location of customer connections

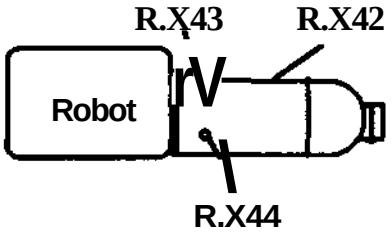

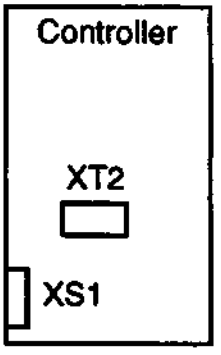

Signal name	User contact control system	User contact on robot
Power supply		
CC3A	XS1.C8	R.X44A
CC3.B	XS1.C9	R.X44.B
CC3.C	XS1.C10	R.X44.C
CC3.D	XS1.C11	R.X44.D
CC3.E	XS1.C12	R.X44.E
CC3.F	XS1.C13	R.X44.F

Signals
Signals with the same number within brackets are twisted pairs.

CC1.A	(1)	XT2.1	R.X42A
CC1.B	(1)	XT2.2	RJC42.B
CC1.C	(2)	XT2.3	R.X42.C
CC1.D	(2)	XT2.4	R.X42.D
CC1.E	(3)	XT2.5	R.X42.E
CC1.F	(3)	XT2.6	R.X42.F
CC1.G	(4)	XT2.7	R.X42.G
CC1.H	(4)	XT2.8	R.X64.H
CC1.J	(5)	XT2.9	R.X42.J
CC1.K	(5)	XT2.10	R.X42.K
CC1.L	(6)	XT2.11	R.X42.L
CC1.M	(6)	XT2.12	R.X42.M
CC2.A	(7)	XT2.13	R.X43A
CC2.B	(7)	XT2.14	R.X43.B
CC2.C	(8)	XT2.15	R.X43.C
CC2.D	(8)	XT2.16	R.X43.D
CC2.E	(9)	XT2.17	R.X43.E
CC2.F	(9)	XT2.18	R.X43.F
CC2.G	(10)	XT2.19	R.X43.G
CC2.H	(10)	XT2.20	R.X43.H
CC2.J	(11)	XT2.21	R.X43J
CC2.K	(11)	XT2.22	R.X43.K
CC2.L	(12)	XT2.23	R.X43.L
CC2.M	(12)	XT2.24	R.X43.M

3.8.2
IRB3000

Location of customer connections

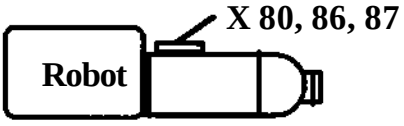

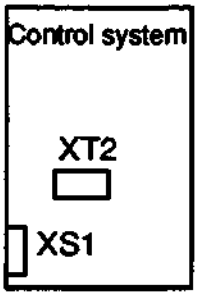

Signal name **control cable**	**User contact on robot**	**User contact**	
Power supply			
CC3.A	XS1.C8	X80.A	
CC3.B	XS1.C9	X80.B	
CC3.C	XS1.C10	X80.C	
CC3.D	XS1.C11	X80.D	
CC3.E	XS1.C12	X80.E	
CC3.F	XS1.C13	X80.F	
	-	X80.G	GROUND
	-	X80.H	KEY PIN
CC3J	XS1.D4	X80.J	
CC3.K	XS1.D5	X80.K	
CC3.L	XS1.D6	X80.L	
CC3.M	XS1.D7	X80.M	

Signals

Signals with the same number within brackets are twisted pairs.

CC1A(1)	XT2.1	X86.A
CC1.B (1)	XT2.1	X86.B
CC1.C (2)	XT2.3	X86.C
CC1.D (2)	XT2.4	X86.D
CC1.E (3)	XT2.5	X86.E
CC1.F (3)	XT2.6	X86.F
CC1.G (4)	XT2.7	X86.G
CC1.H (4)	XT2.8	X86.H
CC1J (5)	XT2.9	X86.J
CC1.K(5)	XT2.10	X86.K
CC1.L (6)	XT2.11	X86.L
CC1.M (6)	XT2.12	X86.M
CC2A(7)	XT2.13	X87.A
CC2.B (7)	XT2.14	X87.B
CC2.C (8)	XT2.15	X87.C
CC2.D (8)	XT2.16	X87.D
CC2.E (9)	**XT2.17**	**X87.E**
CC2.F (9)	XT2.18	X87.F
CC2.GU0)	XT2.19	X87.G
CC2.H (10)	XT2.20	X87.H
CC2 *J* (11)	XT2.21	X87.J
CC2.KU1)	XT2.22	X87.K
CC2.L (12)	XT2.23	X87.L
CC2.MQ2)	XT2.24	X87.M

3.8.3
1KB 3200

Location of customer connections

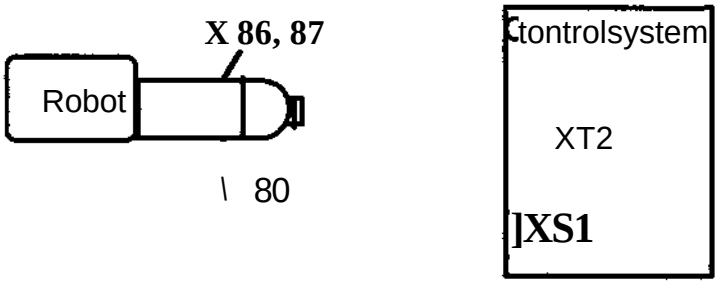

Signal name	User contact control cable	User contact on robot	
Power supply			
CC3.A	XS1.C8	X80.A	
CC3.B	XS1.C9	X80.B	
CC3.C	XS1.C10	X80.C	
CC3.D	XS1.C11	X80.D	
CC3.E	XS1.C12	X80.E	
CC3.F	XS1.C13	X80.F	
	-	X80.G	GROUND
CC3.J	XS1.D4	X80.J	
CC3.L	XS1.D6	X80.L	

Signals

Signals with the same number within brackets are twisted pairs.

CC1.AU)	XT2.1	X86.A
CC1.B(1)	XT2.2	X86.B
CC1.C (2)	XT2.3	X86.C
CC1.D (2)	XT2.4	X86.D
CC1.E (3)	XT2.5	X86.E
CC1.F(3)	XT2.6	X86.F
CC1.G(4)	XT2.7	X86.G
CC1.H(4)	XT2.8	X86.H
CC1.J(5)	XT2.9	X86.J
CC1.K(5)	XT2.10	X86.K
CC1.L(6)	XT2.11	X86.L
CC1.M (6)	XT2.12	X86.M
CC2.A(7)	XT2.13	X87.A
CC2.B (7)	XT2.14	X87.B
CC2.C (8)	XT2.15	X87.C
CC2.D (8)	XT2.16	X87.D
CC2.E (9)	XT2.17	X87.E
CC2.F(9)	XT2.18	X87.F
CC2.GU0)	XT2.19	X87.G
CC2.H (10)	XT2.20	X87.H
CC2.J (11)	XT2.21	X87.J
CC2.K(11)	XT2.22	X87.K
CC2.L(12)	XT2.23	X87.L
CC2.M(12)	XT2.24	X87.M

3.8.4
IRB6000

Location of customer connections.

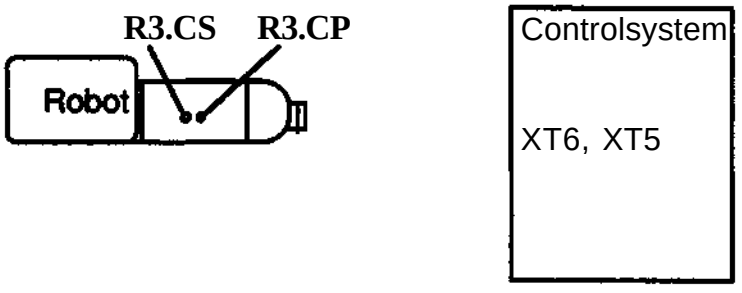

Siffnnl name	User contact control cable	User contact on robot	
Power supply			
CPA	XT6.1	R3.CPA	
CPB	XT6 2	R3.CP:B	
CPC	XT6 3	R3.CP:C	
CPD	XT6.4	R3.CP:D	
CPE	XT6.5	R3.CP:E	
CPF	XT6.6	R3.CP:F	
	-	R3.CP:G	GROUND
CPJ	XT6.7	R3.CP:J	
CPK	XT6.8	R3.CP:K	
CPL	XT6.9	R3.CP:L	
CPM	XT6.10	R3.CP:	

Signals

Signals with the same number within brackets are twisted pairs.

CSA(l)	XT5.1	R3.CSA
CSB (1)	XT5.2	R3.CS:B
CSC (2)	XT5.3	R3.CS:C
CSD (2)	XT5.4	R3.CS:D
CSE (3)	XT5.5	R3.CS:E
CSF (3)	XT5.6	R3.CS:F
CSG(4)	**XT5.7**	**R3.CS:G**
CSH (4)	XT5.8	**R3.CS:H**
CSJ(5)	XT5.9	**R3.CSJ**
CSK(5)	XT5.10	R3.CS:K
CSL (6)	XT5.11	R3.CS:L
CSM (6)	XT5.12	R3.CS:M
CSN (7)	XT5.13	R3.CS:N
CSP (7)	XT5.14	R3.CS:P
CSQ (8)	XT5.15	R3.CS:R
CSR(8)	XT5.16	R3.CS:S
CSS (9)	XT5.17	R3.CS:T
CST(9)	XT5.18	R3.CS:U
CSU (10)	XT5.19	R3.CS:V
CSV (10)	XT5.20	R3.CS:W
CSX (11)	XT5.21	R3.CSX
CSY(ll)	XT5.22	R3.CS:Y
CSZO2)	XT5.23	R3.CS:Z

3.9
Sensor interface

3.9.1
General

A detailed description of the sensor interface and adaptivity is included in the Programming Manual. The following sensor types can be connected:

SENSOR TYPE	SIGNAL LEVEL	
Digital one bit sensors	High	"1"
	Low	"0"
Digital two bit sensors	High	"01"
	No signal	"00"
	Low	"10"
	Error status	"11" (stop of programme running)
Analog sensors	-10 V to+10 V	

The sensors can be used for the following functions. Note the option "Adaptivity" must be included in the system software. The sensors are connected to the control cabinet via inputs on the circuit boards in accordance with the table:

SENSOR	FUNCTION	CONNECTED VIA
Digital one bit sensor	Distance searching	Safety board
Digital two bit sensor	Distance searching	Digital I/O board
	Speed control	Digital I/O board
Digital two bit sensor	Distance searching	Digital I/O board
	Direction searching	Digital I/O board
	Speed control	Digital I/O board
	Contour tracking	Digital I/O board
Analog sensor	Distance searching	Analog I/O board
	Direction searching	Analog I/O board
	Speed control	Analog I/O board
	Contour tracking	Analog I/O board

3.9.2
Connection of digital sensors

A digital sensor can be connected to any of the inputs. Both bits in a two bit sensor are to be connected to input channels within the same 8-16 bit group. The connection is to be made to two input channels next to each other, with the lowest bit connected to the input channel with the lower number.

Up to three one-bit sensors for distance searching can be connected to the sensor inputs of the safety board. These inputs have faster response time, 12 ±5 ms compared to 12 (-5 +15) for the digital inputs. The inputs are supplied with +24 V voltage in the same way as for digital I/O.

Sensor inputs on the system board cannot cope with input signals with pulse widths between 0.2 and 4 ms. It is therefore important to use transducers with hysteresis, intended for industrial environments.

Certain proximity transducers can give showers of pulses where they are at the change-over point or if the supply voltage is disturbed.

CONNECTION TABLE - Signals from one-bit sensors via the safety board
User contact XS3 or XT3

Signal name	Function	Terminal	Note
SENSOR 1	See Programming manual	D10	logical input 237
SENSOR 2	See Programming manual	D11	logical input 238
SENSOR 3	See Programming manual	D12	logical input 239
0 V SENSOR	0 V, supply to SENSOR inputs	D13	

3.9.3
Connection of analog sensors

An analog sensor can be connected to any analog input on the analog I/O board.

3.10
I/O (option)

The figure below shows the control cabinet boards, both the basic version and options available.

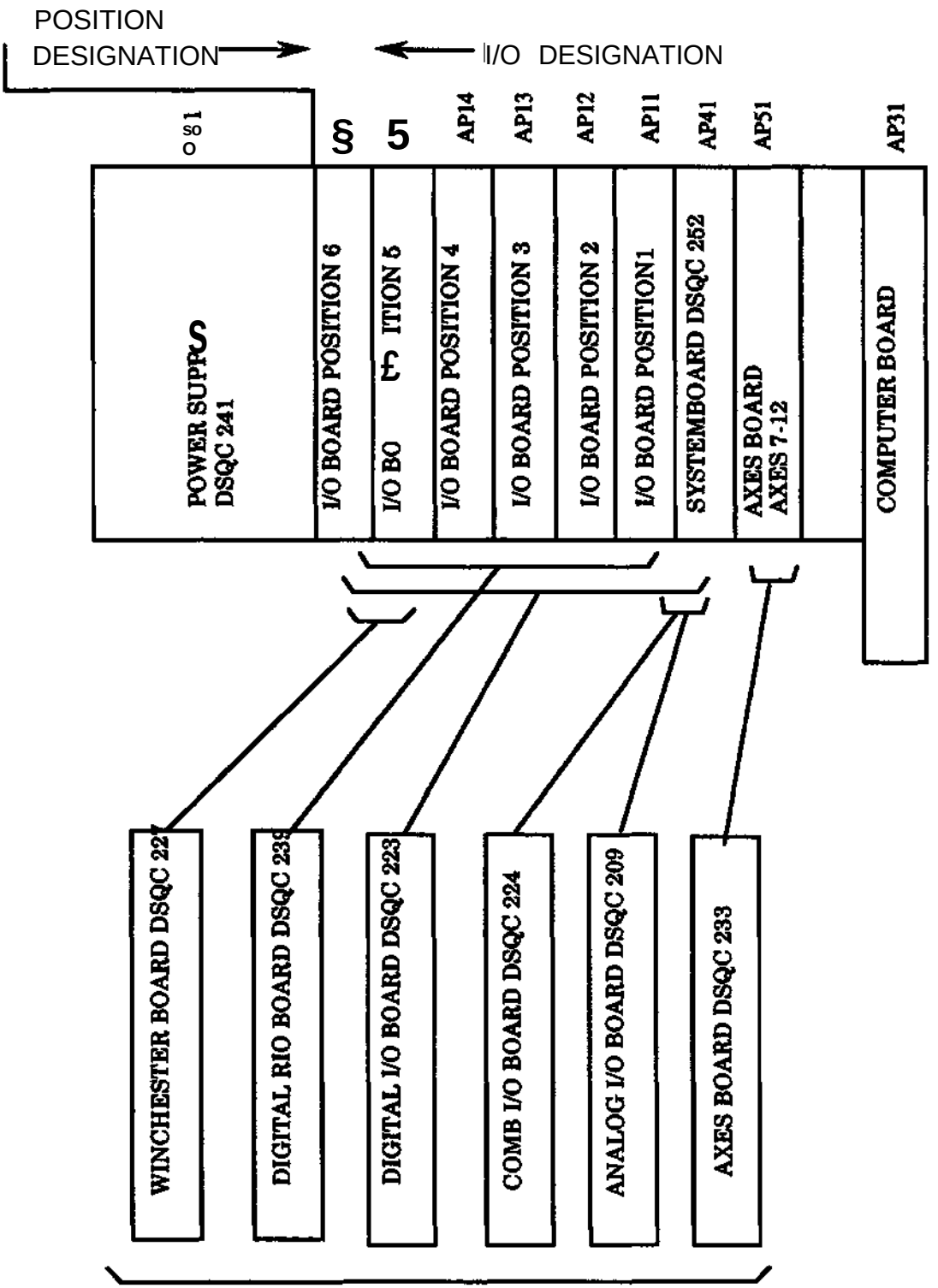

3.10.1
Digital I/O

The system has 6 slots for I/O boards, 5 if Winchester memory is included. Each digital I/O board has 16 inputs divided into two groups of 8, and 16 outputs divided into two groups of 8. Each group is intended for supply from 24 VDC. The groups are galvanically isolated and can be supplied from a separate voltage as long as the potential relative to system ground is not too high, or all groups may be supplied from the cabinet 24 V I/O supply.

3.10.2
Technical data for each group of 8 channels

Inputs:	Optoinsulated Rated voltage 24 V DC + 45%, -20% Input current at rated voltage 5.5 mA Min. 15 V gives "1", closed input Max. 5 V gives "0", open input
Outputs:	Optoinsulated, current sourcing, short-circuit protected Rated voltage 24 V DC +45%, -20% Max. load capacity per output 200 mA Max. load capacity for the complete group of 8 outputs 1A Voltage drop in amplifier max. 2.5 V An active signal (output set to 1) means that current is sourced.

3.10.3
Numbering of digital I/O

Under "I/O USE" it is possible to choose between "PREDEF" and I/O MAP[1].

NOTE! When you push PREDEF and the BREAK/ACTIVE, you will have the predefined in- and outputs activated. When you push I/O MAP and the BREAK/ACTIVE the I/O MAP is activated.

PREDEF

PREDEF:The I/O boards are numbered from right to left. The logical numbering is 1-128 for inputs and outputs. The relation between physical inputs/outputs and logical inputs/outputs is not dependant on the place at which the board is located. The numbering always begins with the first digital board irrespective of its place in the rack.

If SYSTEM-I/O and/or REMOTE CONTROL PANEL alt. ESAB I/O are defined for one or two of the I/O boards the consequent connection between physical inputs/outputs and logical numbering of in/outputs will be changed in accordance with the following:

- SYSTEM-I/O or ESAB I/O defined.
  The logical numbering of inputs/outputs omits the physical inputs/outputs 9-16 on the board selected.

- REMOTE CONTROL PANEL defined.
  The logical numbering of inputs/outputs omits the physical inputs/outputs 1-8 on the board selected for Remote control I/O.

To avoid jumps in the numberingthe SYSTEM I/O and/or REMOTE CONTROL PANEL I/O should be defined on the last digital I/O board.

I/O MAP

- **I/O MAP, Possibility to assign any digital, system or panel I/O to any arbitrary physical I/O channel.**

  - **Under the function DIG both board place and channel on the board are defined and the position is given a logical I/O number between 1 and 190.**

  - **Under SYS the required system-inputs and outputs are defined, by entering board place and channel number. To continue in the menue, answer the question CONTINUE with YES.**

  - **Under PANEL are, in the same way, inputs and outputs for remote panel defined.**

  - **Under LINK I/O a physical output is connected to a physical input, so that the output is activated/resetted when the input is activated/reseted.**

  - **The desired input must be defined as digital, system or panel input before Unking it to an output.**

  - **To change a link, first clear the linked I/O table and then define all desired links again. It is possible to link more than one output to the same input. Up to 15 links are allowed.**

NOTE! If I/O MAP is used, all digital inputs and outputs must be defined on defined digital boards in the system. It is adviseable to note on paper all mapped and linked I/O, see 5.2.4.7.3 for a list of available system and panel I/O.The following are connection tables for digital I/O boards with the recommended placing in the controlcabinet:

CONNECCTTON TABLE

digital I/O board place	User contact	User contact relay
place 1AP11	XS11 or XT 11	AP21.XT1
place 2 AP12	XS12 or XT 12	AP22.XT1
place 3 AP13	XS13 or XT 13	AP23.XT1
place 4 AP14	XS14 or XT 14	AP24.XT1
place 5 AP15	XS15 or XT 15	AP25.XT1
place 6 AP16	XS16 or XT 16	AP26.XT1

Signal name	Function	XS	XT	AP=Relay	
INPUT CHI		83	2	XT1.201	
INPUT CH 2		C3	3	XT1.202	
INPUT CH 3		D3	4	XT1.203	
INPUT CH 4		A4	**5**	XT1.204	
INPUT CH 5		B4	6	XT1.205	
INPUT CH 6		C4	7	XT1.206	
INPUT CH 7		D4	8	XT1.207	
INPUT CH 8		A5	9	XT1.208	
Ul-	OV.supply to group 1	B5	10	XT1.U1-	
INPUTCH9		D5	12	XT1.209	
INPUT CH 10		A6	13	XT1.210	
INPUT CH 11		B6	14	XT1.211	
INPUT CH 12		C6	15	XT1.212	
INPUT CH 13		D6	16	XT1.213	
INPUT CH 14		A7	17	XT1.214	
INPUT CH 15		B7	18	XT1.215	
INPUT CH 16		C7	19	XT1.216	
U2	-OV.supply to group 2	D7	20	XT1.U2-	
U3+	24 V, supply to group 3	A8	21	XT1.+	
OUTPUT CH 1		B8	22	XT1.14(12)	XT1.11 1)
OUTPUT CH 2		**C8**	**23**	XT1.24(22)	**XT1.21**
OUTPUT CH 3		**D8**	24	XT1.34(32)	XT1.31
OUTPUT CH 4		**A9**	25	XT1.44(42)	XT1.41
OUTPUT CH 5		B9	26	XT1.54(52)	XT1.51
OUTPUT CH 6		C9	27	XT1.64(62)	XT1.61
OUTPUT CH 7		D9	28	XT1.74(72)	XT1.71
OUTPUT CH 8		A10	29	XT1.84(82)	XT1.81
U3-	0V, supply to group 3	BIO	30	XT1.-	
U4+	24 V.supply to group 4	CIO	31	XT1.+	
OUTPUT CH 9		D10	32	XT1.94(92)	XT1.91
OUTPUT CH 10		A11	33	XT1.104(102)	XT1.101
OUTPUT CH 11		B11	34	XT1.114(112)	XT1.111
OUTPUT CH 12		C11	35	XT1.124(122)	XT1.121
OUTPUT CH 13		D11	36	XT1.134(132)	XT1.131
OUTPUT CH 14		A12	37	XT1.144U42)	XT1.141
OUTPUT CH 15		B12	38	XT1.154(152)	XT1.151
OUTPUT CH 16		C12	39	XT1.164(162)	XT1.161
U4-	OV.supply to group 4	D12	40	XT1.-	

1) xl.14 normal open contact
(12) normal cloced contact
11 common

3.10.4
System-I/O

PREDEF iThe 8 last physical inputs and outputs on any, but preferably on the last digital I/O board can be reserved for certain dedicated system functions, designated system-I/O, with the help of a system parameter.

CONNECTION TABLE (For relay unit, see **3.10.3)**

Signal name	**Function**	XS	XT	
INPUT CH 9	Interrupt instruction	D5	12	
INPUT CH 10	Interrupt program	A6	13	
INPUT CH 11	Jump to program 1	B6	14	
INPUT CH 12	Jump to program 2	C6	15	
INPUT CH 13	Jump to program 3	D6	16	
INPUT CH 14	Jump to program 4	A7	17	
INPUT CH 15	Jump to program 5	B7	18	
INPUT CH 16	Restart arc welding	C7	19	Only AW
U2-	0 V, supply to group 2	D7	20	
U4+	24 V, supply to group 4	CIO	31	
OUTPUT CH 9	Gripl	D10	32	
OUTPUT CH 10	Grip 2	A11	33	
OUTPUT CH 11	MOTOR ON	B11	34	
OUTPUT CH 12	CYCLE ON	C11	35	
OUTPUT CH 13	**CYCLE ERROR**	D11	36	
OUTPUT CH 14	MANUAL REDUCED SPEED, MANUAL FULL SPEED	A12	37	
OUTPUT CH 15	SEARCH STOP	B12	38	
OUTPUT CH 16	Not used	C12	39	
U4-	0 V, supply to group 4	D12	40	

NOTE! Input signals must be delayed in relation to each other by at least 10 ms and activated in the correct sequence to be sure that they are processed in the correct order and interpreted correctly by the system.

POMAK When system- I/O under I/O MAP is used also the following functions are available.

SYSTEM AUTO The output SYSTEM AUTO is set when all of the following are set:
- Key switch is in AUTO
- No Emergency stop
- AUTO INPUT is trigged

It is reset when any of the three first conditions is not true or a error code appears.

HOLD/RESET HOLD, EXTERNAL HOLD/RESET HOLD, HOLD ACKNOWLEDGEMENT.

When EXTERNAL HOLD is activated (active low) the system is taken to program stop and after 1 sec. to MOTOR OFF. An output HOLD ACKnowledge is activated as long as the system is in HOLD state. When HOLD RESET is set, the motors are energized (= MOTOR ON) and the program starts (PROG START). HOLD RESET is only permitted when the system is in SYSTEM AUTO and EXTERNAL HOLD is passive.EXTERNAL HOLD can stop the robot in both AUTO and MANUAL mode. HOLD state is cancelled by pressing MOTOR OFF (vaild only if SYSTEM AUTO INPUT has been defined).

Note 1. To achieve soft stop followed by MOTOR OFF condition utilizing dual channel safety, see 3.5.6.
To resume MOTOR ON and program running use AUTO INPUT.

Note 2. If flexible I/O (I/O MAP) is used, the SWI inputs are always 1-6 and the SWI outputs 1-13 as shown in 3.16, irrespective of where the SWI board is located.
These inputs and outputs are to be defined under I/O MAP.

ERROR IN AUTO — Activated when an error occurs that stops program execution when SYSTEM AUTO INPUT is set. The most common operators faults does not set this output.

MOVE RESTART — When input MOVE RESTART is activated (activ high) and the robotsystem is taken to mode "MOTOR ON" the function MOVE RESTART (See MOV REST chapter 7.11 in Programming manual) is executed.

3.10.5
ESAB I/O

The ESAB- I/O is a variant of the system -I/O (only AW).
The ESAB -I/O is only available on I/O board position 3, and can not be used together with System-I/O or Panel-I/O.

CONNECTION TABLE (For relay unit, see 3.10.3)

Signal name	Function	XS	XT
INPUT CH 9	Interrupt instruction	D5	12
INPUT CH 10	Interrupt program	A6	13
INPUT CH 11	Jump to program 1	B6	14
INPUT CH 12	Jump to program 2	C6	15
INPUT CH 13	**AW restart**	D6	16
INPUT CH 14	**PROGSTOP**	A7	17
INPUT CH 15	**PROG START**	B7	18
INPUT CH 16	**SYNC**	C7	19
U2-	0 V, supply to group 2	D7	20
U4+	24 V, supply to group 4	CIO	31
OUTPUT CH 9	Gripl	D10	32
OUTPUT CH 10	Grip2	A11	33
OUTPUT CH 11	MOTOR ON	B11	34
OUTPUT CH 12	Cycle on	C11	35
OUTPUT CH 13	Cycle error	D11	36
OUTPUT CH 14	MANUAL REDUCED SPEED, **MANUAL FIULL SPEED**	A12	37
OUTPUT CH 15	Search stop	B12	38
OUTPUT CH 16	Not used	C12	39
U4-	0 V, supply to group 4	D12	40

Note! If flexible I/O (I/O MAP) is used, all in- and outputs above are available under SYSTEM or PANEL menus.

3.10.6
Panel -I/O

With the help of one system parameter is it possible to reserve the 8 first physical inputs/outputs on eligible digital I/O board, for remote control of one or several robot system. The last I/O-board in the frame is recommended.

The last inputs and outputs on this board can be used for system I/O or as general inputs and outputs.

CONNECTION TABLE (For relay unit, see 3.10.3)

Signal name	Function	XS	XT	**Remark**
INPUT CHI	MOTOR ONbutton	B3	2	Active only in AUTO
INPUT CH 2	MOTOR OFF button	C3	3	
INPUT CH 3	FROM DISK button	D3	4	Active only in AUTO
INPUT CH 4	Key switch, contact	A4	5	
INPUT CH 5	LAMPTEST button	B4	6	
INPUT CH 6	PROG STOP button	C4	7	
INPUT CH 7	PROG START button	D4	8	Active only in AUTO
INPUT CH 8	SYNC button	A5	9	Active only in AUTO
U1-	0 V, supply to group 1	B5	10	
U3+	24 V, supply to group 3	A8	21	
OUTPUT CH 1	MOTOR ON lamp	B8	22	
OUTPUT CH 2	PROG START lamp	C8	23	
OUTPUT CH 3	SYNC lamp	D8	24	
OUTPUT CH 4	MOTOR OFF lamp	A9	25	
OUTPUT CH 5	PROG STOP lamp	B9	26	
OUTPUT CH 6	FROM DISK lamp	C9	27	
OUTPUT CH 7	ERROR lamp	D9	28	
OUTPUT CH 8	EMERGENCY STOP lamp	A10	29	
US-	0 V, supply to group 3	BIO	30	

Above logical inputs and outputs are available when system- I/O under I/O MAP is used. Then they are defined on selectable physical in- and outputs.
Note! You can define just one or a few of the panel in- and outputs and selec at any place phsical in- and output.

3.10.7
Error outputs

- ERROR lamp (Panel I/O) is set simultaneously with flashing lamp in MOTOR OFF button. It is also set at LAMP TEST. Any error is indicated including wrong commands.

- CYCLE ERROR (System I/O) is set at every error of type 5xx independent of operating mode selected.

- ERROR IN AUTO (System I/O avaible in I/O MAP) is set at errors stopping program running provided that SYSTEM AUTO INPUT is set.

3.10.8
System **ports**

Individual inputs/outputs can be used separately in a user program or, alternatively, can be addressed as a group, called a port.

The status of an input in an input port in read to a register on giving the fetch command. See the Programming Manual. To set on output port, the value of a register is transferred to the port Portsl, 2 and 11,12 are 4-bit ports and the numerical value they can handle is therefore 0-15. Ports 3,4 and 13,14 are 8-bits and can handle 0-255.

The ports are only active in connection with execution of REGISTER instructions. The normal functions of the digital inputs/outputs in other program sections is not affected.

The port can contain 4 inputs/outputs (ports 11,12,1 and 2) or 8 input/outputs (ports 13, 4,3 and 4). There are also two sequential ports 70 and 80 which embrace both inputs and outputs.

Possible couplings between inputs/outputs and ports 1-4 or ports 11-14 are shown in the table below. (LSB means Least Significant Bit and MSB means Most Significant Bit).

Port no.	**Logical output**	**Port no.**	**Logical input**
1	1 First bit (LSB) 2 • 4 0-15 3 • 4 Last bit (MSB)	11	1 First bit (LSB) 2 • 4 0-15 3 • 4 Last bit (MSB)
2	13 First bit (LSB) 14 • 4 0-15 15 • 16 Last bit (MSB)	12	13 First bit (LSB) 14 • 4 0-15 15 • 16 Last bit (MSB)
3	17 First bit (LSB) 18 • 19 • 20 • 8 0-255 21 • 22 • 23 • 24 Last bit (MSB)	13	17 First bit (LSB) 18 • 19 • 20 • 8 0-255 21 • 22 • 23 • 24 Last bit (MSB)
4	25 First bit (LSB) 26 • 27 • 28 • 8 0-255 29 • 30 • 31 • 32 Last bit (MSB)	14	25 First bit (LSB) 26 • 27 • 28 • 8 0-255 29 • 30 • 31 • 32 Last bit (MSB)

Port 70 and port 80
The port numbers 70 and 80 are used to transmit 16 bit binary numbers. The transmission is sequential and divided into four sections with four bits each time. The robot system and the peripherals "shake hands" between each section of four bits.

The table below shows the coupling between inputs/outputs and ports 70 and 80. The number of bits is 4 x 4, and the value of the number register can be between -32.768 and +32.767

Port no. 70	Data out	Port no. 80	Data in
	Output		Input
	1 First bit (LSB)		1 First bit (LSB)
	2 •		2 •
70*	3 •	80**	3 •
	4 Last bit (MSB)		4 Last bit (MSB)
	5		5
	6		
	Input (control)		Outmit (for control)
	5		1 First bit (LSB)
			2 •
			3 •
			4 Last bit (MSB)

* Excludes use of port 1

** Excludes use of ports 1 and 11

A fuller explanation of the use of these ports is included in the Programming Manual.

3.10.9
Remote I/O, RIO (Remote Input Output)

The control system can be equipped with one RIO-board. The RIO-board can be programmed to 32, 64,96 or 128 digital in- and outputs, depending on how many other digital I/O boards that are installed in the system. The maximum number of digital in- and outputs the system can handle is 128. The board should be placed to the left of the last I/O-board in the frame, this gives the most freedom to choose configuration on the RIO-board.

On the front of the board there are 32 leds. The first 16 is used to indicate status for the first 16 inputs on the RIO-board, the other 16 is for indication of the first 16 outputs.

The RIO-board is to be connected to an ALLEN BRADLEY PLC with a screened, two conductor cable.

NOTE! The robot system does not recognise a malfunction of the communication to the PLC. Inputs maintains the status of the last update from PLC.

CONNECTION TABLE

Customer terminals: XT17

Signal name	Terminal
LINE 1 (BLUE)	1
LINE 2 (CLEAR)	2

This product incorporates a communications link which is licensed under patents and proprietary technology of Allen-Bradley Company, Inc.. Allen-Bradley Company, Inc. does not warrant or support this product. All warranty and support services for this product are the responsibility of and provided by ABB Robotics **AB.**

3.11
Analog I/O (option)

One analog I/O board can be placed at board position 1. A board is available for analog inputs/outputs with:

- 4 inputs for 0 - ±10 V
- 3 voltage outputs for 0 - ±10 V
- 1 current output for 0 - ±20 mA

As a alternative is a combined I/O board available, see 3.11.3.

The inputs and outputs belong to a common group which is galvanically isolated from the electronics of the control cabinet. The analog I/O-board is placed on I/O-board position KD26.168) but connected to a separate contact.

The analog inputs and outputs in the robot system can be supplied with an internal ±15 V voltage from the control cabinet or with an external ±15 V voltage. When internal ±15 V voltage is used, there is no galvanic isolation between the analog inputs/outputs and the control cabinet electronics.

The function of the analog I/O board is shown in principle in the following figure:

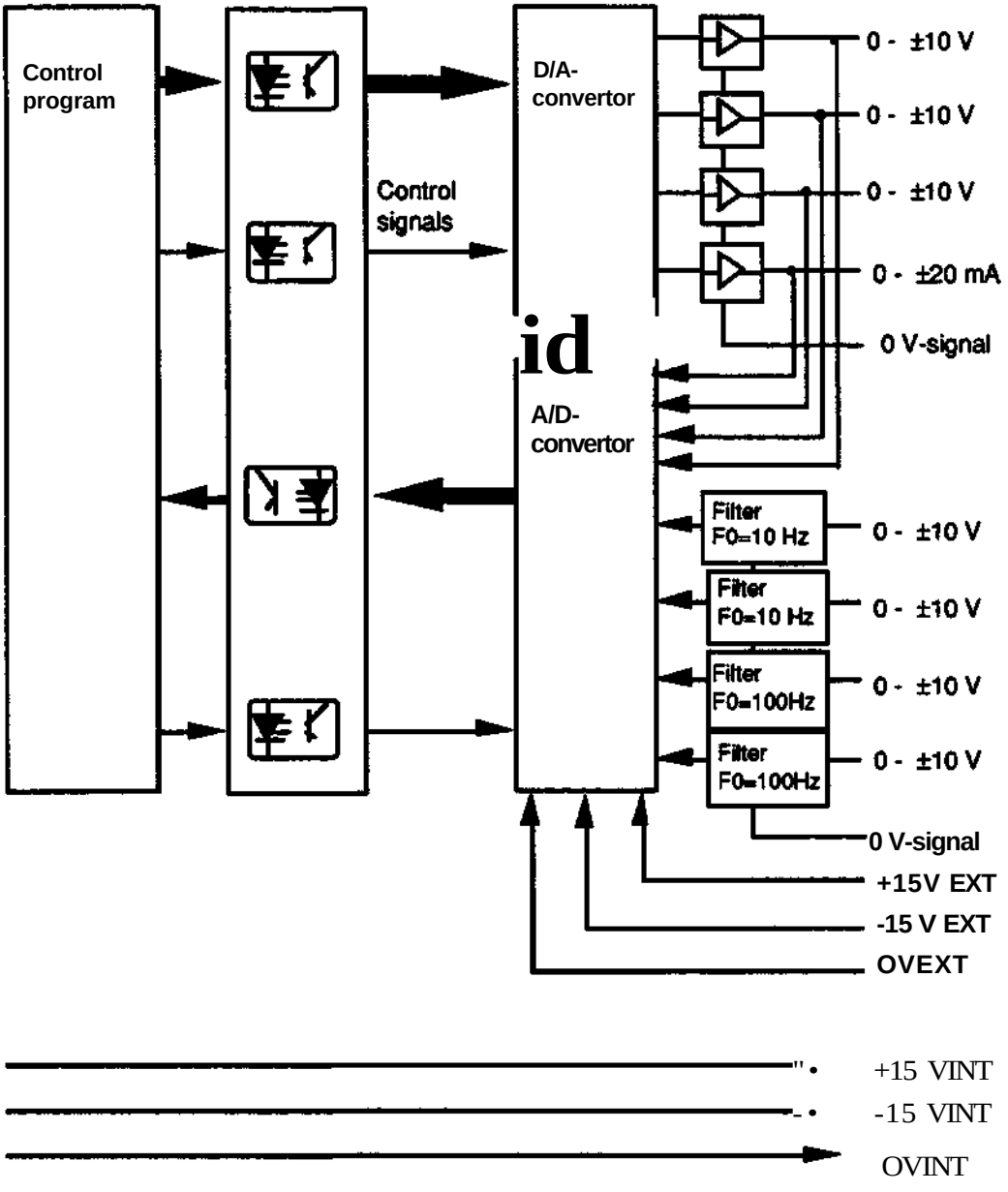

Technical data

Inputs
- 2 with input filter break point = 10 Hz
- 2 with input filter break point = 100 Hz

Common data:

Input impedance	1 Mohm
Input voltage	±10 V
Resolution	10 mV (10/1024 V)
Inaccuracy	15 mV + 0.2% of input signal

Outputs
- 3 voltage outputs

Output voltage	±10 V
Load impedance	>2 kohm
Resolution	10 mV (10/1024 V)
Inaccuracy	25 mV + 0.45% of output signal

- 1 currant output

Output current	±20 mA
Load impedance	<450 ohm
Resolution	20 µA (20/1024 mA)
Inaccuracy	60 µA + 0.5% of output current

External ±15 **V supply**

Voltage	14.3 -15.7 V
Max. current requirement with full load	+15 V: 240 mA -15 V: 130 mA
Max. potential in relation to cabinet earth	500 V for a maximum of 1 minute 50 V continuously
Signal class inputs/outputs and internal supply	Measurement signals

3.11.1 Analog Ports

The physical input/output signals are coupled logically to different ports. A "port" is the robot system designation of analog inputs/outputs. Port numbers used are:
- 31-34 inputs.
- 21-24 for outputs.

Port 31-34 can transfer 0.01-10 V to a register who will get the value 1-1024.

Port 21-23 transfer register values 1-1024 to analog outputs 0.01-10 V.

Port 24 transfer register values 1-1024 to analog outputs 0.02-20 mA.

3.11.2

Analog Connections

The connection table below presents the connection between physical inputs/outputs and ports:

Signal name	Function	Terminal XS10	Terminal XT10	Notes
INPUT CHI	0 - ±10 V max. 10 Hz	B3	2	Port 31
INPUT CH 2	0 - ±10 V max. 10 Hz	A3	I	Port 32
INPUT CH 3	0 - ±10 V max. 100 Hz	D3	4	Port 33
INPUT CH **4**	0 - ±10 V max. 100 Hz	C3	3	Port 34
OV	Return analog input	B4	6	Internally connected to A4(5)
OV	Return analog input	A4	5	Internally connected to B46)
OUTPUT CH 1	0 - ±10 V min. 8 kohm	D4	8	Port 21 Normally voltage reference in AW-systems
OUTPUT CH 2	0-±10Vmin. 4kohm	C4	7	Port 22 Normally current reference in AW-systems
OUTPUT CH 3	0 - ±10 V min. 2 kohm	B5	10	Port 23
OUTPUT CH 4	0 - ±20 mA max. 450 ohm	D5	12	Port 24
OV	Return analog output	A5	9	Internally connected to C5(ll)
OV	Return analog output	C5	II	Internally connected to A5(9)
EXT+15V	External supply +15 V	B6	14	+15 V supply of analog I/O Internally connected to A6(13)
EXT+15V	External supply +15 V	A6	13	+15 V supply of analog I/O. Internally connected to B6(14)
EXT-15 V	External supply -15 V	B7	18	-15 V supply of analog I/O. Internally connected to A7(17)
EXT-15 V	External supply -15 V	A7	17	-15 V supply of analog I/O. Internally connected to B7(18)
OV	0 V external supply	D6	16	0 V supply of analog I/O. Internally connected to C6(15)
OV	0 V external supply	C6	15	0 V supply of analog I/O. Internally connected to D6(16)

The following applies with internal supply:

There is no galvanic isolation from the control cabinet electronics.
The internal +15 V, -15 V and 0 V are available at the same contact (duplicated with internal connector) and must be strapped to the corresponding terminal for external voltages.
The internal +15 V, -15 V and 0 V may only be used for voltage supply of the analog I/O board.

INT+15 V	Internal supply +15 V	Dll	36	Strapped to a B6 and/or A6(14,13)
INT+15 V	Internal supply +15 V	Cll	35	Strapped to a B6 and/or A6(14,13)
INT-15 V	Internal supply -15 V	B12	38	Strapped to a B7 and/or A7(18,17)
INT-15 V	Internal supply -15 V	A12	37	Strapped to a B7 and/or A7(18,17)
OV	OV	D12	40	Strapped to D6 and/orC6(16,15)
OV	OV	C12	39	Strapped to D6 and/or C6 (16,15)

3.11.3
Combined I/O (option)

A combined I/O board can be placed at board position 1, a board with both digital and analog functions:

- 16 digital inputs
- 16 digital outputs
- 2 voltage outputs for 0 - +10 V

The combined I/O board has 16 digital inputs divided into two groups of 8, and digital 16 outputs divided into two groups of 8. Each group is intended for supply from 24 VDC. The groups are galvanically isolated and can be supplied from a separate voltage as long as the potential relative to system ground is not too high, or all groups may be supplied from the cabinet 24 V **I/O** supply.

The two analog outputs belong to a common group which is galvanically isolated from the electronics of the control cabinet The combined I/O is placed at board position 1 (D26.168), but is connected separately for digital respective analog part

The two analog outputs in the robot system can be supplied with an internal ±15 V voltage from the control cabinet or with an external ±15 V voltage. When internal ±15 V voltage is used, there is no galvanic isolation between the analog outputs and the control cabinet electronics.

Technical data. Digital input/output for each group of 8 channels

Inputs: Optoinsulated
Rated voltage 24 V DC + 45%, -20%
Input current at rated voltage 5.5 mA
Min. 15 V gives "1", closed input
Max. 5 V gives "0", open input

Outputs: Optoinsulated, current sourcing, short-circuit protected
Rated voltage 24 V DC +45%, -20%
Max. load capacity per output 200 ma
Max. load capacity for the complete group of 8 outputs 1A
Voltage drop in amplifier max. 2.5 V
An active signal (output set to 1) means that current is sourced.

Technical data. Analog output

Outputs: 2 voltage outputs
Output voltage 0- +10 V
Load impedance >2 kohm
Resolution 10 mV (10/1024 V)
Inaccuracy 25 mV + 0.40% of output signal

External +15 V supply:

Voltage 14.3 -15.7 V
Max. current requirement at heavy load ±15 V: 15 mA
Max. potential in relation to cabinet earth 500 V for a maximum of 1 minute
50 V continuously
Signal class inputs/outputs
and external supply Measurement signals

3.11.4
Connection tables - combined I/O

The following are connection tables for combined I/O boards with the recommended placing in the control cabinet:

CONNECTION TABLES - digital channel
User contact: XS11 ELLER XT11

Signal name	Function	Terminal XS11	Terminal XT11	
INPUT CHI		B3	2	Logical input 1
INPUT CH 2		C3	3	Logical input 2
INPUT CH 3		D3	4	Logical input 3
INPUT CH 4		A4	5	Logical input 4
INPUT CH 5		B4	6	Logical input 5
INPUT CH 6		C4	7	Logical input 6
INPUT CH 7		D4	8	Logical input 7
INPUT CH 8		A5	9	Logical input 8
Ul-	0 V, supply to group 1	B5	10	
INPUTCH9		D5	12	Logical input 9
INPUT CH 10		A6	13	Logical input 10
INPUT CH 11		B6	14	Logical input 11
INPUT CH 12		C6	15	Logical input 12
INPUT CH 13		D6	16	Logical input 13
INPUT CH 14		A7	17	Logical input 14
INPUT CH 15		B7	18	Logical input 15
INPUT CH 16		C7	19	Logical input 16
U2-	0 V, supply to group 2	D7	20	
U3+	24 V, supply to group 3	AS	21	
OUTPUT CH 1		B8	22	Logical output 1
OUTPUT CH 2		C8	23	Logical output 2
OUTPUT CH 3		D8	24	Logical output 3
OUTPUT CH 4		A9	25	Logical output 4
OUTPUT CH 5		B9	26	Logical output 5
OUTPUT CH 6		C9	27	Logical output 6
OUTPUT CH 7		D9	28	Logical output 7
OUTPUT CH 8		A10	29	Logical output 8
U3-	0 V, supply to group 3	BIO	30	
U4+	24 V, supply to group 4	CIO	31	
OUTPUT CH 9		D10	32	Logical output 9
OUTPUT CH 10		A11	33	Logical output 10
OUTPUT CH 11		B11	34	Logical output 11
OUTPUT CH 12		C11	35	Logical output 12
OUTPUT CH 13		D11	36	Logical output 13
OUTPUT CH 14		A12	37	Logical output 14
OUTPUT CH 15		B12	38	Logical output 15
OUTPUT CH 16		C12	39	Logical output 16
U4-	0 V, supply to group 4	D12	40	

CONNECTION TABLE • analog channels
User contact: XS10 or XT10

Signal name	Function	Terminal		Notes
	XS10	XT10		
INPUT CHI	0 -+10 V	D3	4	Internal testing input
INPUT CH 2	0 -+10 V	C3	3	Internal testing input
OV	Return testing input	B3	2	Internally connected eachother. A3(6)
to				
OV to	Return testing input	B3,A3	1	Internally connected eachother. C3(5)
OUTPUT CH 1	0 - ±10 V min. 2 kohm	**D4**	8	Port 21 Normally voltage reference in AW-systems
OUTPUT CH 2	0 - ±10 V min. 2 kohm	C4	7	Port 22 Normally current reference in AW-systems
OV	Return analog output	B5	10	
OV	Return analog output	D5	12	
EXT+15V	External SUDDIV +15 V	B6	14	+15 V supply of analog outputs. Internally connected to eachother. A6(13)
EXT+15V	External supply +15 V	A6	13	+15 V supply of analog outputs. Internally connected to eachother. B6(14)
EXT-15 V	External supply -15 V	B7	18	-15 V supply of analog outputs. Internally connected to eachother. A7(17)
EXT-15 V	External supply -15 V	A7	17	-15 V supply of analog outputs. Internally connected to eachother.(,18)
0V	0 V external supply	D6	16	0 V supply of analog outputs.Internally connected to eachother C6.(15)
OV	0 V external supply	C6	15	0 V supply of analog outputs.Internally connected to eachother. D6(16)

The following applies with internal supply:

There is no galvanic isolation from the control cabinet electronics.
The internal +15 V, -15 V and 0 V are available at the same contact (duplicated with internal connector) and must be strapped to the corresponding terminal for external voltages.
The internal +15 V, -15 V and 0 V may only be used for voltage supply of the analog I/O board.

INT+15 V	Internal supply+15 V	D8	(24)	Strapped to a B6 and/orA6 (14,13)
INT+15 V	Internal supply+15 V	C8	(23)	Strapped to a B6 and/orA6 (14,13)
INT-15 V	Internal supply-15 V	B8	(22)	Strapped to a B7 and/orA7 (18,17)
INT-15 V	Internal supply-15 V	A8	(21)	Strapped to a B7 and/orA7 (18,17)
OV	OV	D7	(20)	Strapped to D6 and/orC6 (16,15)
OV	OV	C7	(19)	Strapped to D6 and/orC6 (16,15)

3.12
Arc weld-I/O (option)

3.12.1
General

For arc welding by an IRB 2000 AW, a I/O board is used in the control system for special arc welding signals:

either
- The first digital board.
- The analog board.

or
- The combined I/O

AW-I/0 is mainly used together with ESAB welding equipment and positioner, who are controlled with external axes and common drive units, see chapter 6, External axes.

The use of these boards is described in the Programming Manual.

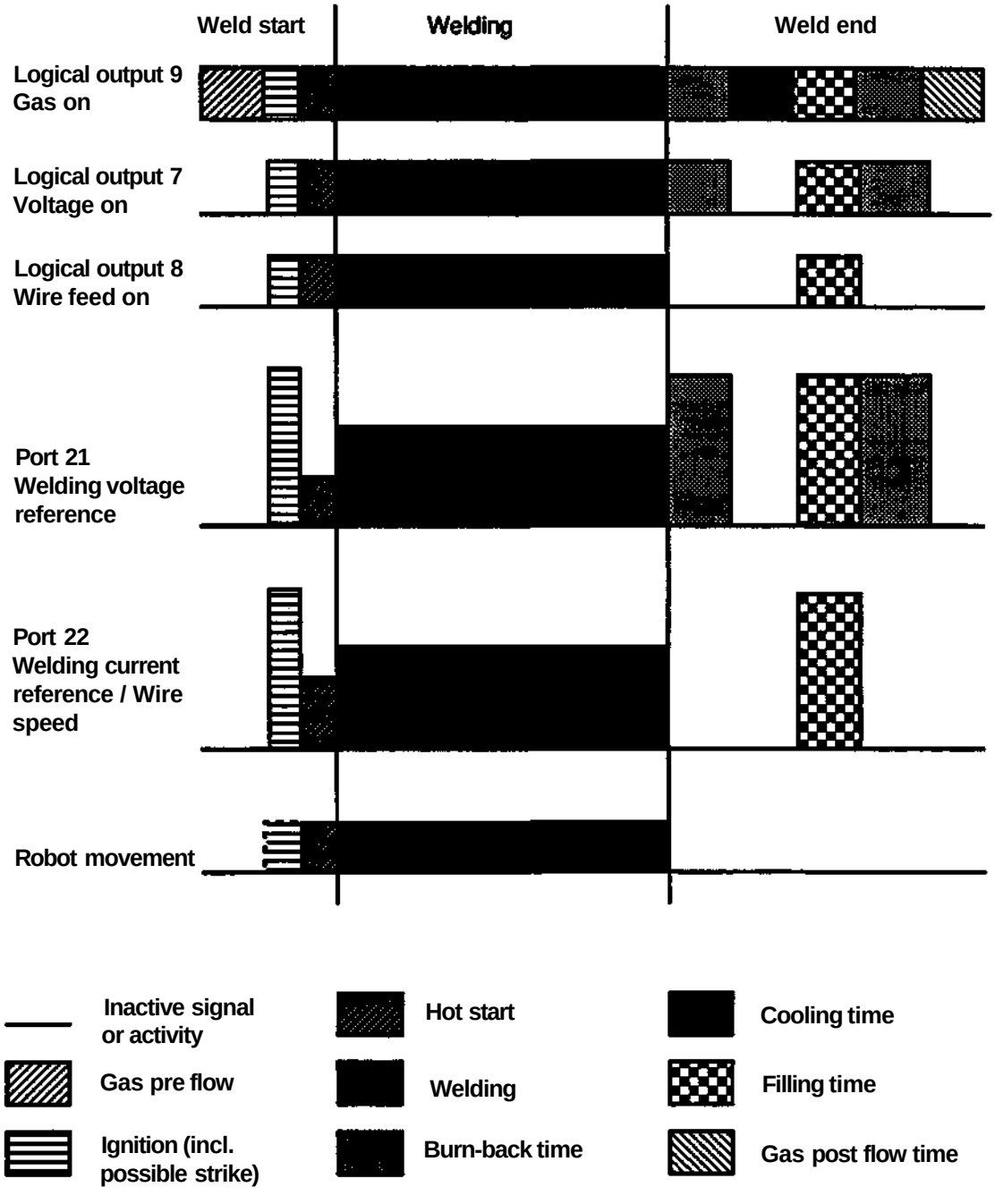

3.12.2
Servo-controlled positioner with common drive unit

The external axes can be distributed to different stations with the help of the parameter STATION so that it becomes possible to activate these in suitable groups.
The stations can be activated/deactivated independently except when axes share a common drive unit. One output and one input are connected to each station to permit activation of the station and to check the status of the station respectively.

Example:

STATION	**A**	**INPUT 11**	**OUTPUT**	**1**	and	**AXES 7**
STATION	B*	INPUT 12	OUTPUT	2	and	**AXES 8,9**
STATION	C*	INPUT 13	OUTPUT	12	and	**AXES 10,11**
STATION	D	INPUT 14	OUTPUT	13	and	**AXES 12**

The axes 8 and 9 and 10 and 11, respectively share two drive units which means that the stations B and C cannot be active simultaneously, this is marked with a *. In this case the synchronized sequence is:
1. C+robot
2. B+A+D+ robot
3. B+D
are deactivated so that only A is active after the synchronization.

A switchover from station to C is illustrated by the following time diagram:

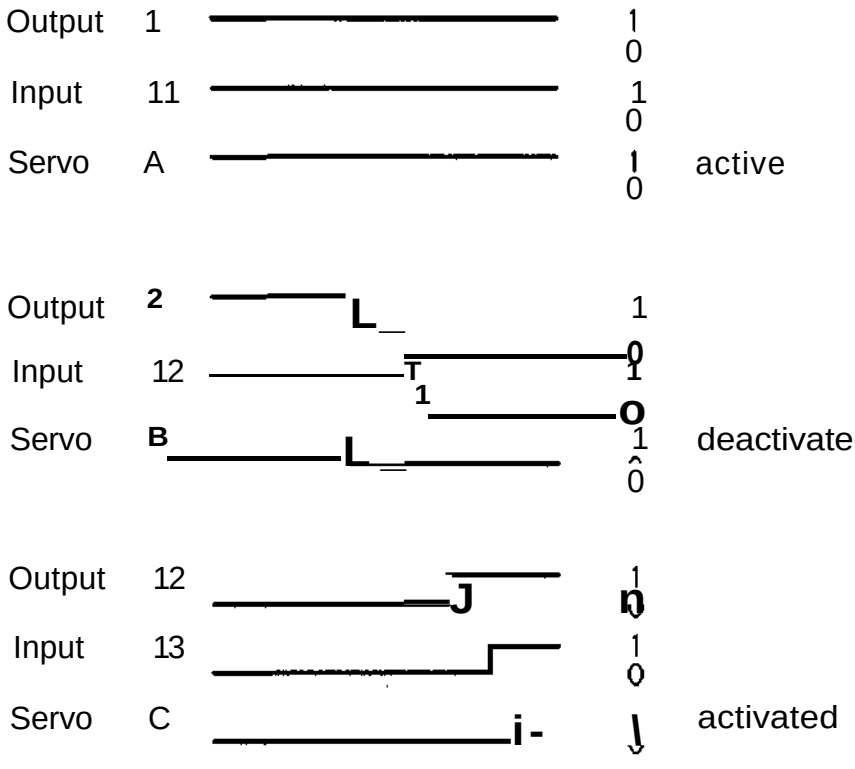

Non-servo-controlled positioner

A non-servo-controlled positioner can be run with the help ov ports 70 and 80. A description of the principles of the ports 70 and 80 is given in section 3.10.8.

Digital arc weld-I/O

The following digital inputs/outputs on the first I/O board are reserved for fixed arc weld functions in 1KB 2000 AW robot systems. Contacts and outputs are shown in the connection table for the first digital I/O board in section 3.10.3.

SIGNALS, WELDING EQUIPMENT

Logical input/output	Function
Input 6	**Supervision of gas/liquid cooling** The input is monitored during the weld start and during the welding. An active signal indicates a satisfactory gas and liquid flow. If the signal disappears, welding in progress is interrupted, an error message is shown and the robot stops.
Input 7	**Supervision of current** The input is monitored during the weld start, during the welding and during the filling time. An active signal indicates a satisfactory welding current. If the signal disappears, welding in progress is interrupted, an error message is presented and the robot stops.
Input 8	**Wire feed on** The input is only activated for manual feed of a new welding wire.
Input 9	**Process off** The input is activated to block the welding during the test running of the welding program. The robot then executes program without connecting the welding instruction via outputs 7-9.
Input 10	**Weaving off** The input is activating for blocking a weaving motion during welding in progress. The robot then executes the weaving instructions as ordinary motions.
Output 7	**Voltage on** An active signal connects the welding equipment.
Output 8	**Wire feed on** An active signal connects the wire feeder.
Output 9	**Gas on** An active signal connects the flow of protective gas.

Logic input/output	Function
Output 1-128	An output which is used to activate/deactivate the drive units for a station. The servo-feedback control is disconnected before the output is reset to 0 to deactivate the drive unit.
Input 11-16	Acknowledgement that a station is activated. The servo-feedback control is connected when the signal has been received.

Only one input and one output are used with each station in accordance with the function parameter STATION.

Analog or combined arc weld-I/O

The following input/outputs are default for arc welding functions in an IRB 2000 AW robot system. Contacts and outputs are presented in the connection table for the analog I/O board in section 3.11.2 and for the combined I/O board in section 3.11.4. Other ports can be chosen using the system parameters.

Analog input/output	Function
Port 21	**Voltage reference** Control signal for welding voltage from the welding equipment.
Port 22	**Current/ Wire speed reference** Control signal for welding current or wire speed, if wire speed is selected, from the welding equipment.

3.13
Program printout/comment entry (option)

The following is necessary for use of this function:

1. A printer/terminal connected to contact XB2 (25 pole 0-sub) at the front of the control system.

   The signals in the connector are:
   2 = SEND
   3 = REC
   5 = CTS
   4 = RTS
   20= DTR
   7 = Signal Ground
   1 = Ground, shield

   Signal class: Data communication signals

2. The parameters for the robot must be correctly defined (see chapter 6,"System parameters").

3. The printer/terminal must have the following technical data:

Signal interface:	V24 / RS232C
Transmission speed:	300 /1200 baud
Word length:	8 bits
Parity:	None
Stop bit:	1 bit

   For a more detailed description of the function, see the Programming Manual.

Note! At a transmission speed of 1200 baud, the printer has to have a printing speed ≥ 150 character/ sec.

3.14
Computer link (option)

The host computer - robot communication is asynchronous and via an RS232C interface. The host computer has to contain communication software necessary.

The following is necessary for the use of a computer link:

1. The host computer is to be connected at connector XBl (multipole type) on the left of the control cabinet.

   The signals in XBl are:

   A = SEND
   B = REC
   E = CTS, if CTS and RTS are not used jumper D to E.
   D = RTS, if CTS and RTS are not used jumper D to E.
   J = DTR, if DTR, RLDS and DSR are not used, jumper J, H and F together.
   H = RLDS, if DTR, RLDS and DSR are not used, jumper J, H and F together.
   F = DSR, if DTR, RLDS and DSR are not used, jumper J, H and F together.
   M = RI
   L = Signal Ground
   K = Ground, shield

   Signal class: Data communication signals.

2. The communication parameters for the robot system must be correctly defined (see chapter 6, "System parameters").

3. The robot system works with the following technical data:

Signal interface:	V24/RS232C
Transmission speed:	9600 baud
Word length:	8 bits
Parity:	Even
Stop bit:	1 bit

For a more detailed description of the function, see description Computer Link.

3.15
External operating panel (option)

The following devices can be placed in an external panel outside the control system:

- Operating panel
- Holder for programming unit
- LCD monitor (option)

When the external operating panel is specified the units above are delivered separately, together with the necessary wiring, sealing strips, screws etc. and to be mounted together in an external panel enclosure. Cover plates are mounted on the control system.

The external panel enclosure must be in accordance with the requirements of IEC 144 and IEC 529 Degree of protection rating IP 54 (NEMA12).

See the dimensioned figure below for the mechanical assembly:

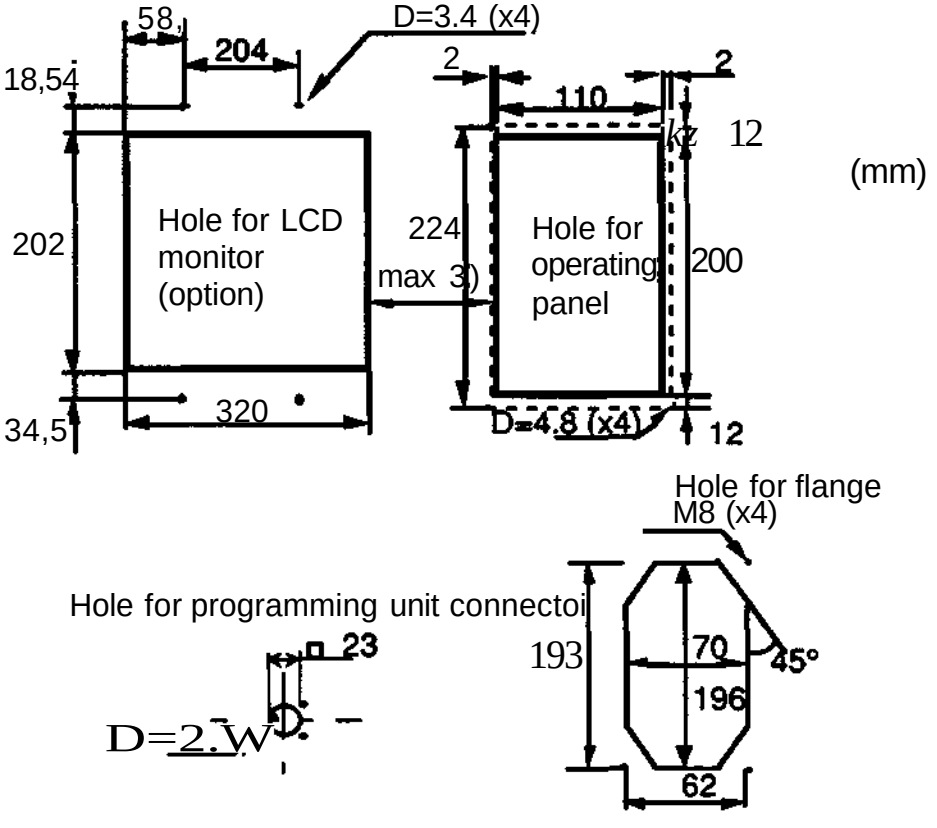

The control system is delivered with cables ended by a flange witch shoulk be mounted in the external panel enclosure.

See the figure below for the princible connections:

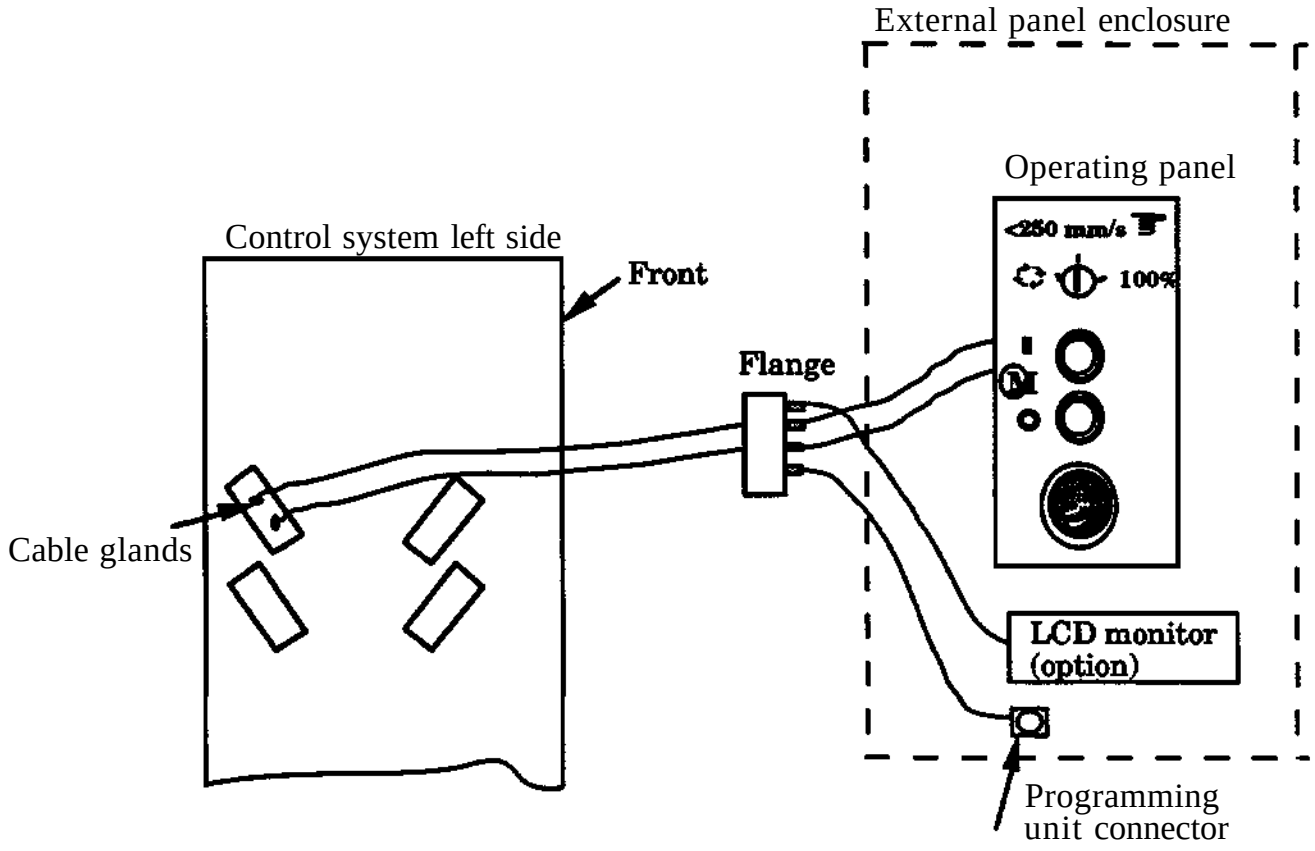

3.17
I/O signals - SWI (Spot Welding, Interface)

On the I/O board DSQC 223 some input and output signals are used for the SWI function, see the figure below. All inputs, however, are still freely programmable and within reach under the MANUAL button. The outputs are also programmable as usual but it is not possible to control them under the MANUAL button.

The GRIP 1 and GRIP 2 signals are used to control both the working stroke and the opening stroke of the first gun . These signals have therefore also been put on the same board as all the other SWI signals. GRIP 1 and GRIP 2 are also available if you have an I/O system.

If a double gun is used, GRIP 3 and GRIP 4 are used for the working stroke and, opening stroke, respectively, of gun two. These output signals are then defined in the usual way in the functional parameters.

An example of reserved inputs and outputs for the SWI function, if the board is placed in the second space.

Flexibel I/O

		no.	ch		ch	no.	
INPUT				inp			
1	WELD READY	17	1		9	25	
2	TIMER OK	18	2		10	26	
3	CURRENT OK	19	3		11	27	
4	FLOW OK	20	4		12	28	
5	TEMP OK	21	5		13	29	
6	ENABLE MOVE	22	6		14	30	
		23	7		15	31	
OUTPUT		24	8		16	32	
				out			
1	START 1	17	1		9	25	WELD PROGRAM "1*
2	START2	18	2		10	26	WELD PROGRAM "2"
3	CURRENT ENABLE	19	3		11	27	WELD PROGRAM "4"
4	WELD POWER	20	4		12	28	WELD PROGRAM "8"
5	RESET	21	5		13	29	WELD PROGRAM "16"
6	GRIP1	22	6		14	30	
7	GRIP 2	23	7		15	31	
8	PARITY	24	8		16	32	

DSQC 223

For more information, see Programming Manual.

NOTE 1. If flexible I/O (I/O-MAP) are used, are SWI-input every time 1 - 6 and SWI-output 1 -13 see table independence of wher SWI-board is defin. This in- and output must be defined in I/O MAP.

Note 2. Reserved input signals that are not used must be strapped to 24 V. This does not apply to WELD READY, which has to be supplied from the welding controller (see above) to make it possible to execute the SWI -instruction.

4
MAINS CONNECTION AND STARTUP

4.1
Power cable connection.

- 4-conductor cable - 3-phase and protective earth for all voltages.
- 5-conductor cable including zero if the option supply to service outlet and illumination before the mains switchis ordered.

A gland for passage of the mains supply cable into the cabinet is located on the left hand side.
As option, power intake type CBE 3x16Amp's or 3x32 Amp's or industrial connector type Halting 6HsB can be use.
Connection according to circuit diagram in S3 Service Manual.

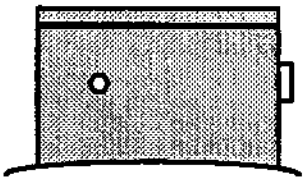

4.1.1
Connection on left hand side

Pass a sufficient length of the mains supply cable through the gland to permit connection to the line filter. Then tighten the gland. To work with the line filter you need to take avay protection cap.

The mains voltage is connected to the line filter inside the cabinet according to the figure below:

LEFT INSIDE WALL OF CABINET

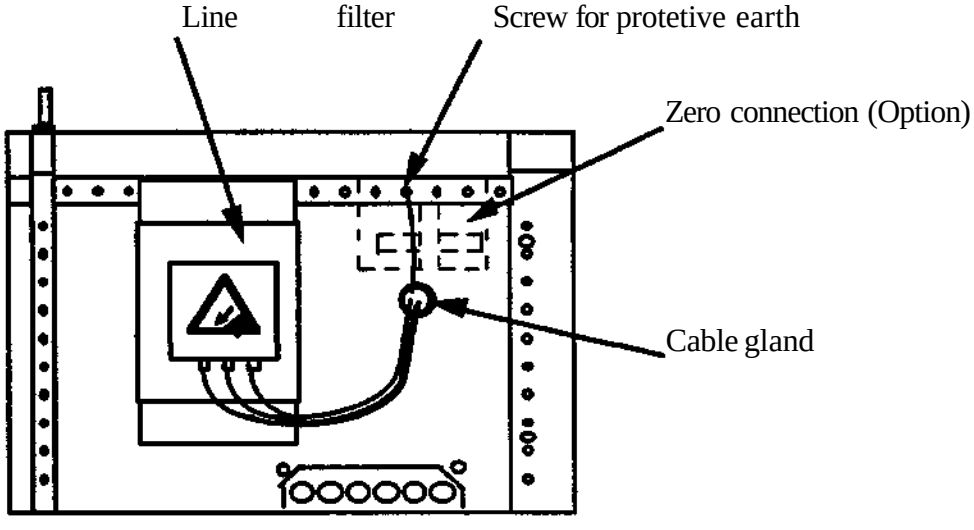

The protective earth is to be connected to the protective earth screw.

4.1.2
Mains transformer

Mains voltage (3-phase)	Recomended connection fuse
3 x 200 V, 220/230 V	**25 A**
3 x 380/400 V, **400/415** V	**16 A**
440 V, **475** V, 500 V, 525 V, 600 V	

ROBOT TYPE	MAINS VOLTAGE				JUMPERS
	TRANSFORMER 3HAA 3101-				
1KB 2000, 3X00	**-CB**	-CC	-CD		
IRB6000		-CE		-CF	
	200V	380V/400V	200V	200V	1-21, 2-31, 3-11
	220V	400V/415V	220V	220V	1-22, 2-32, 3-12
		400V	380V/400V	500V	1-23, 2-33, 3-13
		475V	400V/415V	525V	1-24, 2-34, 3-14
			440V	600V	1-25, 2-35, 3-15
			475V		1-61, 2-71, 3-51
			500V		1-62. 2-72, 3-52
			525V		1-63, 2-73, 3-53
			600V		1-64, 2-74, 3-54

4.2

Check list before startup

Before switching on the power, check as follows:

1. The mains supply fused rating.

2. The supply transformer in the cabinet is connected for the correct voltage.

3. The unused circuits in the safetychains must be closed by connecting jumpering:

Auto Stop:	XS3 or XT3	A3 - A4 and B3 - B4
Manual Stop:	XS3 or XT3	Al - A2 and Bl - B2
General Stop:	XS3 or XT3	A5 - A6 and B5 - B6
Customer emergency stop	XS3 or XT3	A7 - A8 and B7 - B8, A9-A10and B9-B10
MOTOR OFF clamping device	XS3orXT3	Cl - C2 and Dl - D2
External axes limit switches:	XS3orXT3	All - A12 andBll - B12
Extdrive units POWER OK:	XS3 or XT3	C12 - C16

4. If the controller includes the external axes option, check that the external axes connections are made, or the following circuits are jumpered:

Motor PTC, axis 7:	XS7	Dl - D2
7th(- 12th) axes limit switches:	XS7	A4 - A5 and B4 - B5

5. The programming unit is connected.

6. The operation modeselector on the operating panel is set to MANUAL <250 mm/s.

4.3
Startup to standby

1. Make sure the cabinet door is closed

2. Switch the power on.

3. The MOTOR OFF lamp on the control panel illuminates when the system has completed the hardware and software diagnostic test. This test lasts about 30 seconds.

The following may occur after the start up routine is completed:

A. Normal start with presentation of the message " ABB ROBOT SYSTEM AT YOUR SERVICE".

B. Presentation of a fault message.

If the MOTOR OFF- lamp flashes, read the error message on the programming unit display. Actions to be taken to correct different errors are described in separate sections in the Programming Manual or the Service Manual. Correct the cause of the fault message and continue the start procedure as in case 1 above.

C. System parameters absent

See the chapter "System parameters".

Normally the robot starts up with the system parameters stored from the manufacturing. If that's not the case and a the fault message "501 FAULT IN THE PARAMETER MEMORY, RELOAD!" is displayed must the system parameters must from DISC be entered, ace. to chap. 5.5"Parameter error".

The system floppy disc delivered with the system is used.

This disc contains system parameters with resolver data that was valid at delivery of the robot system (according to chapter 8).

D. Specific system parameters.

Define the specific system parameters that is valid for the installation in question. Check and entering of parameters is described in chapter 5 "System parameters".

Before switching to the MOTOR ON mode, the system parameters must be checked in particular **the conunutating offset and the robot** sync, offset, to avoid **racing and the risk of a breakdown.**

1. After checking the system parameters the robot can be started.
   From MOTOR OFF, as described in chapter 4.3 the robot system is switched to MOTOR ON by pressing the enabeling device on the programming unit.

2. Robot with absolute measurement has a well known absolute position if the robotis calibrated and is therefor directly ready for operation.

   Calibration is described in the service manual.

   If the robot has external axes that has to be synchronized (wellknown home position) the MOTOR ON -lamp start to flash. The external axes aresynchronized by
pressing the SYNC button on the programming unit.

3. The robot is ready for operation when the MOTOR ON - lamp stops flashing and the text READY is presented on the display.

Before pressing the synchronization button make sure that external axes are free to move into the synchronizing position (home position).

5
SYSTEM PARAMETERS

5.1
Introduction

All handling of system parameters should be performed by personnel familiar with robot programming.

System parameters is the name given to certain basic data used by the robot system. Duringrobot installation or programming they are given values which correspond to the specific robot equipment and application.

The system parameters can be divided into two groups:

1. Individual parameters for a number of functions which can be given different values ("defined") to suit the configuration of the robot and control system (section 5.2).

2. Parameters for calibration of the resolvers on each robot axis and defined external axis (section 5.3).

Active system parameters are available in a RWM memory which is provided with battery backup.

Parameters in group 1 above are also stored on a PROM with predefined values. These values (default values) are always available if other values have not been "defined" to the RWM during installation or programming.

A complete set of system parameters should be stored (back-up) on a floppy disk or through a computer link to a host computer. This is done in the event of a fault on the robot computer board (RWM-memory with belonging battery back-up).
Observe that when storing system parameters on a floppy disk or host computer is, beside the sysemparameters ace. to group 1 and 2, also the following system- and programdata are stored: TCP, BASE POINT, FRAME, ALIGN, SENSOR, PALET and SOFT SERVO.

Note that when loading parameters from the PROM memory to the RWM memory, values for resolver data (parameters in group 2) are set to zero or lack a value, since these have no predefined PROM values. These resolver data must therefor be entered manually after loading parameters from the PROM memory. This is not the case when loading parameters from a floppy disk, or from a host (superior) computer, provided of course, that resolver data has been stored in these memories.

5.1.1
Handling system parameters

Note that if instead of completing the handling of the system parameters, the operator switches off the power to the robot, the newly entered values of the parameter memory will be lost.

To ensure future availability of the system parameters after commissioning or trimming it is recommended:

1. To always store valid system parameters either on a diskette or on a superior computer if connected and used as a Host.

2. The resolver and commutation offsets should, in addition, always be kept current in the ID documentation of the robot installation.

The menu on the programming unit for selection of individual system parameters is built up in accordance with the following principles:

The display of the menu on a certain level is obtained by pressing the function button SCAN. Submenus are selected by pressing the function button for the function required. A higher level menu is selected by pressing the function button BREAK

5.1.2 System parameter menus

The main menus under PARAM are:

- **CHANGE to check and change the individual system parameters, which all have predefined values on delivery.**
- **FR DISK and TO DISK respectively to down-load and store sets of parameters between the RWM to a floppy disk.**
- RESOLV to check and change the calibration of the resolvers (see remark below).
- FR SC and TO SC respectively to down-load and store sets of parameters between the RWM and a computer SC, or "option".

The main menues under PARAM is only available if:

1. Key-switch on the control cabinet are in either MANUAL or MANUAL FULL SPEED mode.

2. If the robot is provieded with computer link the robot must be in LOCAL MOD. The function RB-MODE under MANUAL is used for switching to local mode.

Remark.
For IRB 6000 there are no resolver COMMOFF parameters. The resolver is mounted in the motor by the motor manufactor with a preset COMMOFF value.

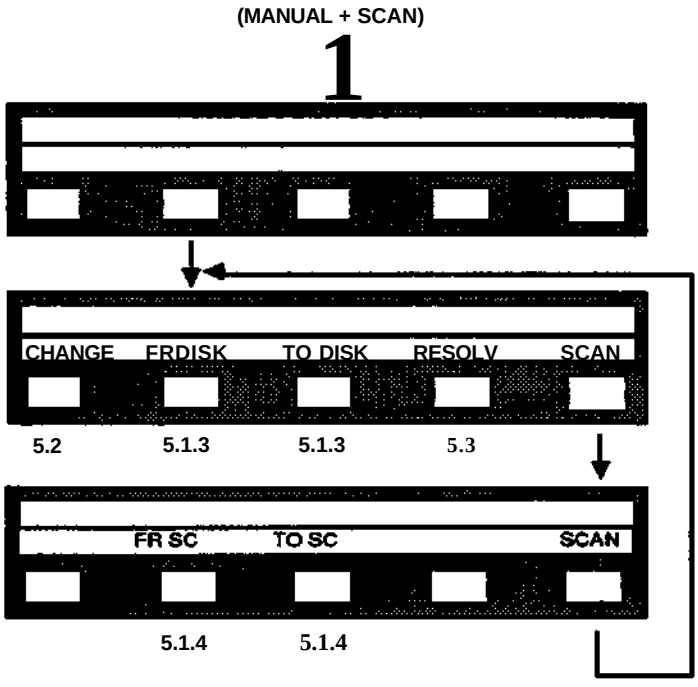

The notations under the menu show in which section the parameter is explained. When the programming unit shows a value for an individual system parameter, it is possible to change the value by entering a new one. If the parameter is only to be checked and not changed, the work is continued by the operator pressing ENTER without entering any data.

Concluding actions:

When the check or change of individual system parameters under the modes CHANGE or RESOLV is completed, the operation is concluded by pressing ACTIVE in the basic menu.

A full list of parameters and keywords is included at the end of this chapter, see section 5.6.

5.1.3
Handling system parameters to **or** from **a** diskette

Storage to diskette

Function Storage of active system parameters from the parameter memory to the diskette. First insert a formatted diskette in the disk drive unit. The diskette may contain associated program blocks.
Menu TO DISK from the main menu.

Note No initialization of the system is performed after this operation.

Loading from diskette

Function Loading of reserve-stored system parameters from diskette to the parameter memory. First insert a diskette containing the required system parameters in the disk drive unit.
Menu FR DISK from the main menu.

Check questions The system concludes with check questions and initialization as described in section 5.1.5.

5.1.4

Handling system parameters to or from a (host) computer

Storage to (host) computer

Function Storage of active system parameters from the parameter memeory to a superior computer. The operation requires the system to be in the REMOTE MODE.

Menu TO SC from the main menu.

Resulting question
Entry of the BLOCK NO 0-9999 under which the system parameters are to be stored.

Note No initialization of the system is performed after this operation.

Loading from a (host) computer

Function Loading of stored system parameter from a (host) computer to the parameter memory. The operation is only permissible if the system is in the REMOTE MODE.

Menu FR SC from the main menu.

Resulting question Entry of the BLOCK NO 0-9999 from which the system parameters are to be accessed.

Check questions The system concludes with check questions and initialization as described in section 5.1.5.

5.1.5
Concluding procedures

1. Every time the user chooses to load parameters from PROM, floppy disc or a superior computer, the old parameters are copied to a mirror area. A check question is displayed, if the new RESOLV- parameters differs from the old ones, as per figure below, and then the possibility is given to reload the old RESOLV-parameters again. This is made so that the robot specified parameters are not changed by mistake.

   If the system parameters for synchronizingoffset, commutation offset and motor type (RESOLV-parameters) not are the same as the old ones, the following menu is shown:

Answer the question, if the reloaded parameters should be valid or if the old RESOLV-parametrers should be copied back into the memory:

NEW = All new parameters is going to be valid.
OLD = The old RESOLV-parameters together with the rest of the new parameters is going to be valid.

2. The control system is then restarted automaticly and if no error is detected, the acknowledgement "ABB ROBOT SYSTEM AT YOUR SERVICE !" is presented.

3. After the system has been restarted:
   - The operation mode is MOTOR OFF.
   - All outputs are reset.
   - All registers are reset.
   - Program 0 is active.
   - External axes are unsynchronized (if not absolute measurement).

In robot with external axes without the absolute measurement, these must be synchronized after the MOTOR is selected.

No INTT is performed when ending the PARAM mode with ACTIVE and no changes of the systemparameters has been made, the robot then answers by displaying the main menue under MAN.

When handling system parameters it is a good rule to always have access to stored parameters on the floppy disc with the correct values.

5.2
Individual system parameters

How the value of one or several individual parameters in the parameter memory is checked or changed is described in this section.

5.2.1
Parameters, menus and submenus

The following menus for system parameters are available under PARAM + CHANGE in the MANUAL mode on the programming unit. The notations under the menu show in which section the parameter is explained, se also next page.

Basic, MH/ASM, S-WELD and GLUE: **ARC Weld:**

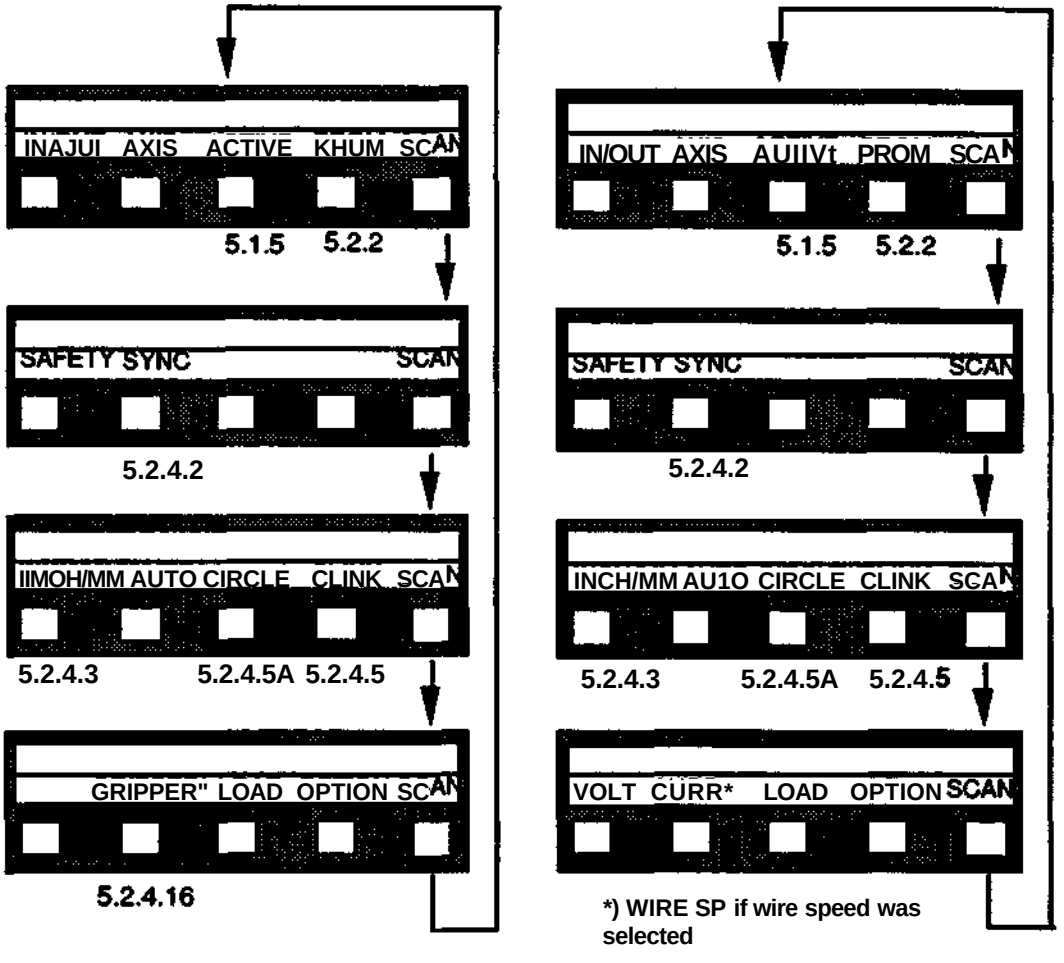

Under PARAM + CHANGE, the basic menu can be left in two ways:

- Via ACTIVE as described in section 5.1.5.
- Via PROM as described in sections 5.2.2.

Submenu to IN/OUT

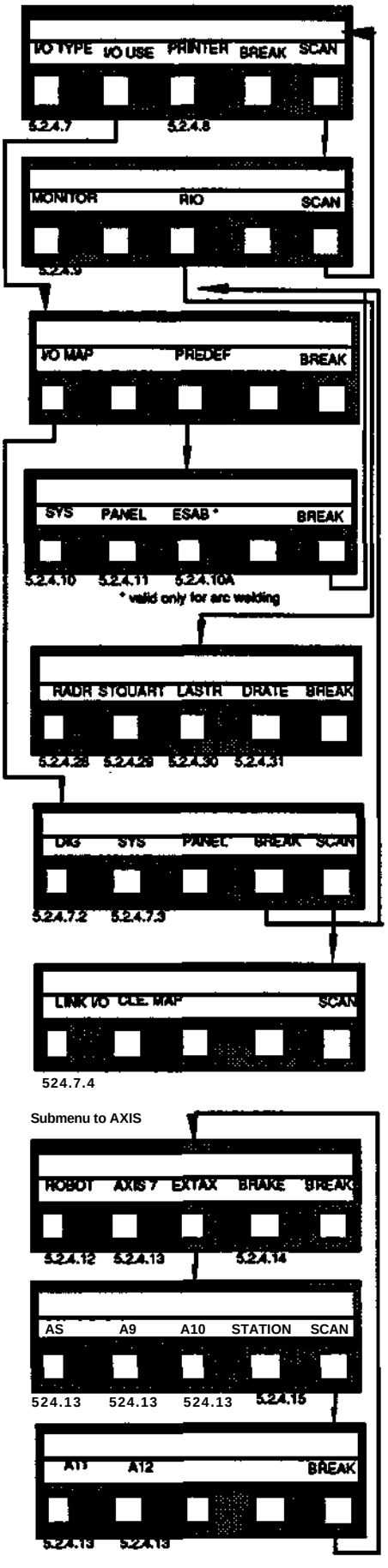

Submenu to SAFETY

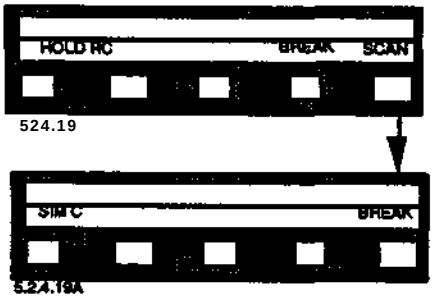

Submenu to LOAD

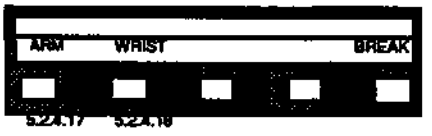

Submenu to OPTION
(for the robot variants BASIC. MH/ASM and GLUE)

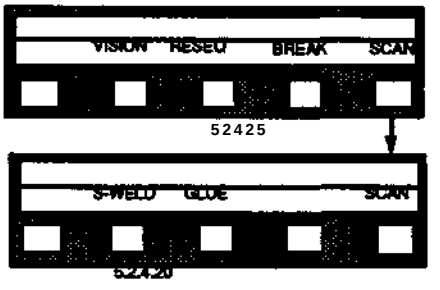

Submenu to OPTION
(for the robot variant IRB 2000 ARCW)

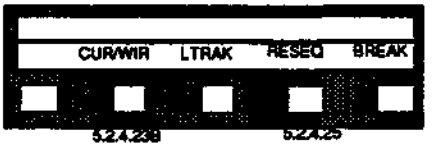

Submenu to AUTO

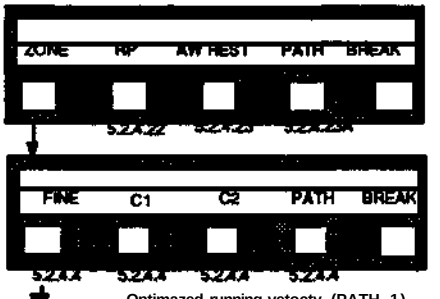

Optimazed running vetocty (PATH .1)

Submenu to VOLT
(Arc welding parameter tor IRB 2000 AW)

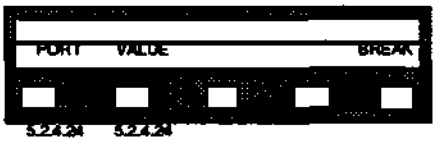

Submenu to CURFV WIRE SP
(Arc welding parameter for IRB 2000 AW)

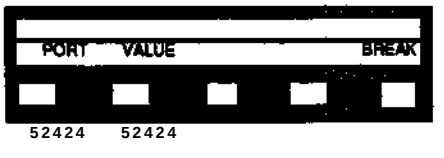

5.2.2
Loading of predefined system parameters from a FROM

Parameters in accordance with sections 5.3 have no predefined values and are cleared with this operation.

Menu
PARAM + CHANGE + PROM

Resulting menu
System language selection. Select the language required.

Check questions
The system concludes with check questions and initialization as described in section 5.1.5.

5.2.4.2
SYNC, robot mounting

Description

The parameter MOUNTING is used to define whether the robot is mounted standing or suspended. The parameter is used to adapt the control of the servo system to the gravitational conditions which apply in the alternative cases.

Menu

SYNC

Guide text

MOUNTING =

Def. range

1 = Standing robot
2 = Suspended robot (not IRB 6000)

Default value

1 = Standing robot

Absolute measurement system axes 7-12

Description

The parameter MEASUREMENT TYPE An (n = axis number) is used to define the measuring system for the servo-system of the external axes. The measurement system for axes 1-6 has always absoulute measurement. That's also valid for axis 7 if it is controlled by a internal drive unit (see section about external axes).

Menu

Resulting question after MOUNTING if external axes (8-12) are defined or if external axis 7 is controlled from an external drive unit.

Guide text

MEASUREMENT SYSTEM TYPE An= (An: A7, A8, A9, A10, A11, A12)

Def. range

0 = Servo system, axis An with sync, switch
1 = Absolute measurement servo-system axis An, according to the method with Fine/ Coarse resolver.

Default value

0 = Servo system axis An with sync, switch

Note

The system cannot be started if the value of the parameter does not correspond to the robots actual configuration.

Restart in absolute measurement system

Description

The parameter RESTART is used to specify whether the system is to execute an integrated program which permits automatic restart after a power failure. The function requires the selection of the absolute measurement system.

Menu

Resulting question if all defifined axes have absolute measurement servo system.

Guide text

RESTART=

Def. range

0 = No restart
1 = Restart

Default value

1 = No restart

Synchronization position

Description

The parameter SYNC POS NO is used to indicate where in the working range the robot axes synchronizes and can be calibrated. For robots with absolute measurement servo-system the position is used only for calebration. The parameter can be used on standing or suspended robots.

Menu

Resulting question after MEASUREMENT TYPE An or after RESTART.

Guide text

SYNC POS NO =

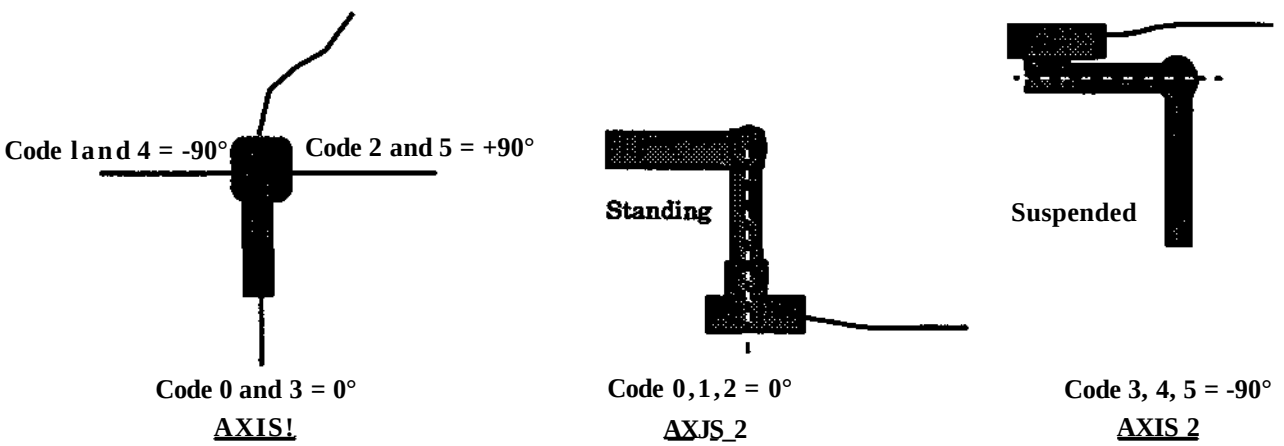

Def. range

0 = Synchronization position axisl = 0°, axis2 = 0°, axis 3 = 0°
1 = Synchronization position axisl = -90°, axis2 = 0°, axis 3 = 0°
2 = Synchronization position axisl = +90°, axis2 = 0°, axis 3 = 0°
3 =s Synchronization position axisl = 0°, axis2 = -90°, axis 3 = -90° (not IRB 6000)
4 = Synchronization position axisl = -90°, axis2 = -90°, axis 3 = -90° (not IRB 6000)
5 = synchronization position axisl = +90°, axis2 = -90°, axis 3 = -90° (not IRB 6000)

Def.range IRB 6000/S 3.0-100

0 = Synchronozation position axisl = 0°, axis2 = +60°, axis3 = -60*
1 = Synchronozation position axisl = -90°, axis2 = +60°, axis3 = -60°
2 = Synchronization position axisl = +90°, axis2 = +60°, axis3 = -60°

Default value

0 = Synchronization position axisl = 0°, axis2 = 0°

Note! Reference to testprogram for movement to calibration position in chapter 8.3.

5.2.4.3 INCH /MM

Description

The parameter is used for selection of either Si-units or American units in operator communication with the programming unit, monitor display screen and printer for program printout.

Menu

INCH/MM

Guide text

UNIT =

Def. range

0 = Si-units (MM, MM/S, KG)
1 = American units (INCH, INCH/MIN, POUND)

Default value

0 = Si-units

5.2.4.4 Zone

The zones used at points have different meaning and value, depending on which optimizing principle is used; speed or path optimizing. Path optimizing use a corner zone, showing how far ahead of a point the control system should begin to generate a parabel path (a parabel path is not generated at a fine point). Speed optimizing use a zero zone, showing the servo system how close to the point the axes should be before driving towards the next point. Both type of zones are installed with MANUAL/PARAM/CHANGE/
AUTO/ZONE. If path optimizing is chosen, corner zones will automatically be installed and if speed optimizing is chosen, zero zones will be installed.

Note! Remember to install the optimizing principle under MANUAL/PARAM/CHANGE/ AUTO/PATH before installing the zones, since they depend on the optimizing principle.

Corner zones for path optimizing

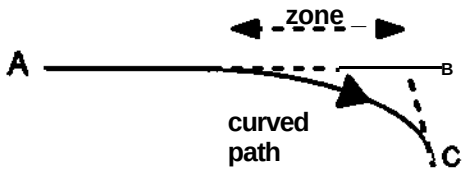

When changing direction or passing a corner, the robot TCP follows a smooth curve which starts at the incoming edge of a defined "zone".

The next instruction starts to execute at the incoming edge of the zone.

The zone size corresponds to the defined size in mm (or inches) in rectangular coordinates. In robot coordinates, measurements are made in increments, and the zone size is generally somewhat smaller than the defined size.

There are two types of zone size definition:

Absolute value - the zone size directly corresponds to the defined size (in rectangular coordinates).

Velocity-dependent value - the zone size is proportional to the programmed TCP-velocity. At 1000 mm/sec the zone size corresponds to the defined size (in rectangular coordinates).

Definiton of zones

The system parameter ZONE is used to define the different available zones:

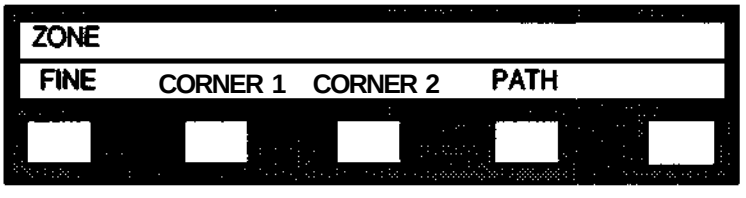

Guide textZone (mm) = If text "zone (in) =" appears, the values shown are in inches.

Definition Range	FINE	CORNER 1	CORNER 2	PATH
Absolute Value	2-100 mm	2-100 mm	2-100 mm	2-100 mm
Velocity-dependant	- -	-200 to-lmm	-200 to-lmm	-200 to-lmm
Defaults Values (mm)	+2	+15	-100	-25

Zero zones for speed optimizing

A. Zero zones for fine points

When positioning to fine points, the control system checks that each axis is within its zero zone before the next movement is begun. This is done to achieve the positioning accuracy required. This check is normally not performed when positioning to coarse points.

The size of the zero zone for the different types of fine points are stored as system - parameters. The system works with zero zones in the form of monitor increments (a certain rotation of the motor shaft in question). Checking and changeing of the size of the zero zones, is performed
in mm.

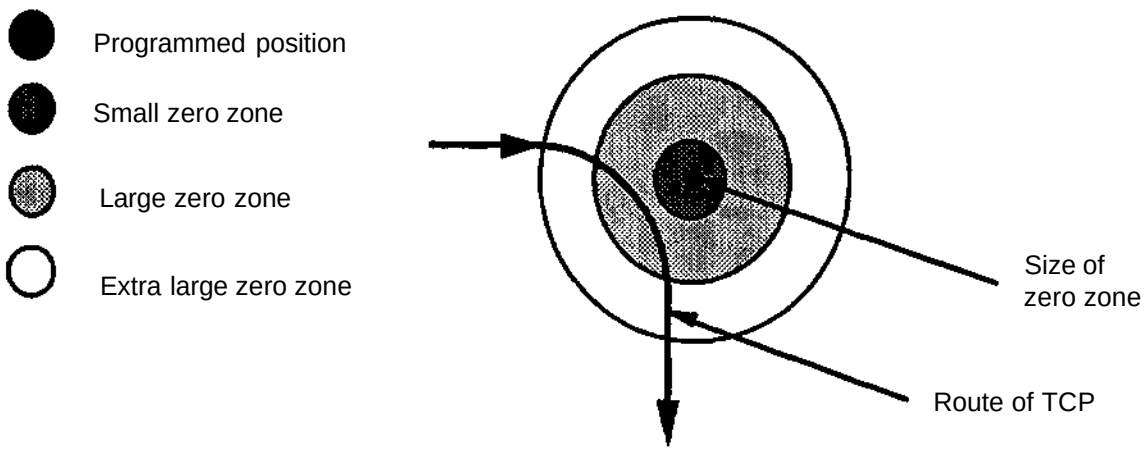

The size of the zero zone expressed in mm is almost in agreement with the actual size under the following conditions only:

- The movement is performed with maximum extended robot arm and with TCP 0 active.

This means that in most cases a smaller real zone is obtained than that expressed in mm.

Description

The system contains a parameter with a zero zone value for each type of fine point:

	Instruction	Parameter	Significance
1	POS FINE	SMALL	Small zero zone
2	POS FINE L	LARGE	Large zero zzone
3	POS FINE XL	EXLARGE	Extra large zero zone

Menu

AUTO + ZONE + SMALL, LARGE or EXLARGE

Guide text

ZONE (MM) =

Def.range

1 - 300 mm
(But not less than the default value for a small zero zone)

Default value

Default values for zero zones for fine points

	~~IRB 2000~~	~~IRB 3000~~	~~IRB 3200~~	~~IRB 6000~~
Small zero zone	1mm	2 mm	2 mm	2 mm
Large zero zone	14 mm	10 mm	10 mm	10 mm
Extra large zero zone	50 mm	50 mm	50 mm	50 mm

Note

If the guide text ZONE (IN) = is shown, inches are used in reading-in and reading-out (1 inch = 25.4 mm).

B. Zero zone for coarse points

Description

Menu selection to define that the control system checks that each axis is with in a defined zero zone before the next movement begins when positioning to coarse points. The coarse point works just as a fine point in cases like this.

Menu

AUTO + ZONE + COARSE

Information text

PRESENT VALUE = NOT DEFINED
= No zero zone for coarse points

Menu selection

DEFINE	= Define zero zones for coarse points
UNDEF	= Undefine zero zone for coarse points
BREAK	= No change required

Parameter

If zero zones are also defined for coarse points, the parameter gives the size of the zero zone.

Menu

Consequential question after DEFINE above.

Guide text

ZONE (MM) =

Def.range

See zero zones fine points , under A above.

Default value

Not defined.

Note

See zero zones fine points, under A above.

5.2.4.5A CIRCLE

The orientation of the tool along the circle path can be chosen in two different ways:

- Method A The reorientation of the tool between the start point and end point will then be performed as a twist in the base coordinate system. No consideration to the orientation of the path is taken. An arc of up to 180° can be obtained from three points. A larger arc can be obtained by building a second arc after the first one.

- Method B The reorientation of the tool between the start point and end point will then be performed relative to the circle path. It is possible to reorientate the tool keeping a constant orientation relative to the circle path. An arc of up to 360° can be obtained from three points.

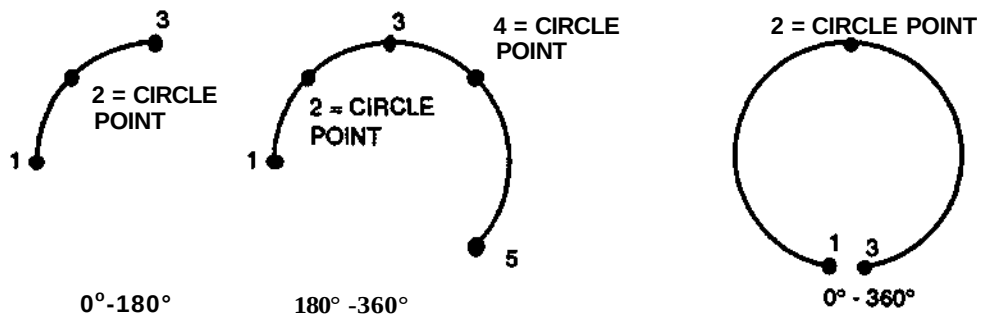

Method A Method B

Description

The orientation of the tool in relation to the circle path.

Menu

CIRCLE

Guide text

ORIENTATION TO CIRCLE=

Def. range

0 = The orientation of the tool is linear interpolated along the circle path.
1 = The orientation of the tool is constant in relation to the circle path.

Default value

0 = The orientation of the tool is linear interpolated along the circle path.

5.2.4.5
CLINK, Robot identity computer link

Description

Menu selection to define that a computer link is connected to the control system. The parameter is to be defined only if the computer link is physically connected between the control system and superior computer, and if the necessary software is installed in the superior computer.

Menu CLINK

Information text

PRESENT VALUE = NOT DEFINIED
= Computer link not connected
PRESENT VALUE = DEFINIED
= Computer link connected

Default value
Computer link not connected.

Menu selection
DEFINE= Computer link connected
UNDEF = Computer link not connecte
BREAK = No change required

Parameter
The parameter IRB IDENTITY is used to define the identity of the robot in question in a system containing more than one robot connected to a superior computer (host computer).

Guide text
IRB IDENTITY =

Menu
Resulting question after DEFINE above.

Def. range
Identity 0-127.

Default value
0 =

5.2.4.7.1
I/O Type

The figure below shows how the (optional) I/O boards can be placed in the rack:

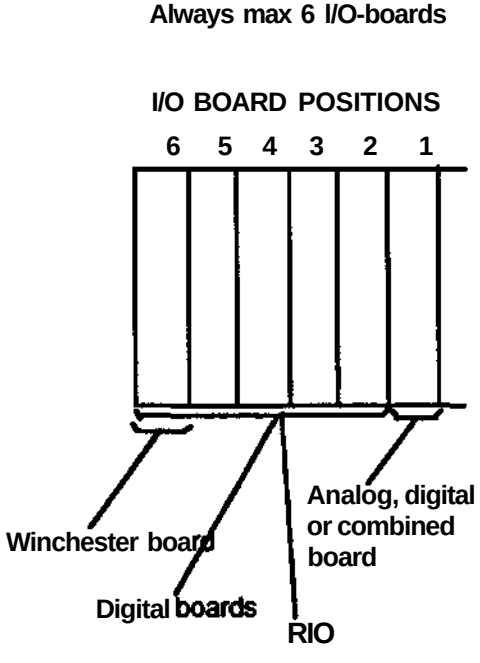

• Recommended rules for configuration of board positions 1-6:

1. Place the first digital I/O board at board position 1.
2. If it is necessary to reserve digital inputs and outputs for system-I/O and/or panel I/O, use the last digital I/O board (highest number on the board position).
3. The analog or combined I/O board must be placed at board position 1.
4. Interface board for the Winchester is placed at board position 6.
5. Place the RIO-board to the left of the last board in the rack.

• The following rules apply to logical numbering of digital and analog inputs and outputs as referenced via the programming unit, monitor and program printout:

1. Logical numbering is performed from right to left (board positions 1) of defined and non-reserved digital inputs and outputs:
   - 1 st digital I/O board counted from right to left in the control cabinet:
     ' Digital input 1-16 and digital output 1-16.
   - 2 nd digital I/O-board:
     ' Digital input 17-32 and digital output 17-32.
   - Etc.
   - If a digital or combined I/O board is defined as system I/O and/or panel I/O:
   - With definition as system I/O or ESAB I/O, digital inputs 9-16 and digital outputs 9-16 on the board in question in the numerical sequence described above are not included.
   - With definition as panel I/O, digital inputs 1-8 and digital outputs 1-8 on the board in question in numerical sequence are not included.
   - The system simply jumps over the reserved physical inputs and outputs on the board in question with the logical numbering from right to left in such a way that the logical numbering has a consecutive number sequence 1,2, 3 etc.

2. Logical numbering on the defined analog I/O board:
   - Physical outputs 1-4 on the board are numbered logically as analog output ports 21-24.
   - Physical inputs 1-4 on the board are numbered logically as analog input ports 31-34.

3. Logical numbering on the defined combined I/O board:
   - Physical outputs 1-2 on the board are numbered logically as analog output ports 21-22.

4. RIO-board DSQC 239 is placed physically in a position one number higher then defined due to same double size of the board.

Description

The parameter boards I/O 1 to I/O 6 are used to define which are installed at board positions.

Sub-menu

I/O TYPE

Guide text

1/01 = Board position I/O 1
1/0 6 = Board position I/O 6
etc.

Def. range

0 = No board at the board position in question.
8 = Digital input/output board DSQC 223
Equipped with maximum 6 boards.
12 = Analog input/output board DSQC 209.
Equipped with maximum 1 board.
20 = Winchester interface board DSQC 227
Equipped with maximum 1 board
40 = Combined input/putput board DSQC 224.

Equipped with maximum 1 board.
64= RIO-board DSQC 239
Equipped with maximum 1 board.

Default value
0 = No board at the board position question.

Sub menue
Valid only for RIO board DSQC 239
RIO CONFIG

Def. range
1/4= 32 digital in - and outputs can be used, equal to 2 logical boards
2/4= 64 digital in - and outputs can be used, equal to 4 logical boards
3/4= 96 digital in - and outputs can be used, equal to 6 logical boards
4/4= 128 digital in- and outputs can be used, equal to all available space in the rack

Permitted combinations

Rack config.	SJtartc|uarte\r			
	0	1	2	3
1/4	X	X	X	X
2/4	X	X	X	
3/4	X	X		
4/4	X			

Se chapter 5.2.4.28 - 5-2-4-31 for more information of RIO - board DSQC 239.

5.2.4.7.2
DIGITAL INPUT and OUTPUT

Description
Menu for selection of physical input, logical input and output. (ROBOT DIG I/O)

Menu
DIG + INPUT or DIG + OUTPUT

Information text
PHYS.INPUT : -- = INP. --
If already defined PHYS.INP: 01 01 = INP 1/SYS OUTPUT.
SYS: A system or panel input is defined.
OUTP: An output is linked for the input.
Editing is performed by entering new values.

Default value
- = no output or input defined.

Parameter
Enter the selected board position and the channel number. Press enter and select the desired input or output for each I/O required.

Guide text
BOARD POSITION=
CHANNEL NO =

Definition range
PHYS.OUTP and PHYS.INP 01.01 to 8.16, OUTPUT and INPUT 1 to 190.

5.2.4.7.3
SYSTEM and PANEL input and output

Description

Menu to define system and panel inputs and outputs

Menu

SYSTEM + INPUT/OUTPUT or PANEL + INPUT/OUTPUT

Information text

SYSTEM INPUT	SYSTEM OUTPUT
HOLD: -	HOLD ACKNOWLEDGED-
EXTERNAL HOLD: -	ERROR IN AUTO: -
HOLD RESET: --	SYSTEM AUTO: -
INT. INSTR.:	TEST MODE: -
INT. PROG.: -	GRIPPER 1: -
CALL PROG. 1, 2, 3,4, 5 : -	GRIPPER 2: -
EXTERNAL HOLD RESET: --	MOTOR ON: -
SYSTEM AUTO INPUT: --	CYCLE ON: -
AW RESTART: --	CYCLE ERROR: -
MOVE RESTART:-	SEARCH STOP: -

PANEL INPUT	PANEL OUTPUT
MOTOR ON: -	MOTOR ON LAMP: -
MOTOR OFF: --	MOTOR OFF LAMP: -
FROM DISC: -	ERROR LAMP: -
SYNC: -	FROM DISC: -
PROG START: -	SYNC LAMP: -
PROG STOP: --	PROG START LAMP: -
KEY SWITCH:-	EMERGENCY STOP LAMP:--
LAMPTEST: -	PROG STOP LAMP: -

If an input/output is already defined it will be shown like HOLD: 0112, were 01 is the board position and 12 is the channel number in this example.
ENTER without value will not change anything.

5.2.4.7.4
LINK I/O

Description

Menu to define physical inputs to be linked to physical outputs. The inputs must be defined as SYSTEM, PANEL or DIGITAL inputs before you can enter a link.

Menu

I/O MAP + SCAN + LINK I/O
CLEAR LINKED I/O TAB ? YES/NO

Information text

PHYS.INP: - = PHYS. OUTP : -

Guide text

BOARD PLACE*
CHANNEL NUMBER=

Def.range

It is possible to link 16 in- and outputs.

Note! The guide texts are showing up only if the link is undefined. To change an already defined link, all linked I/O:s must be cleared and then defined again.

5.2.4.8
PRINTER

Description

Menu selection for defining that a printer is connected to the system. The printer can be used for program and error code printouts. In arc welding systems, the printer can also be used for welding data printout.

Menu

IN/OUT + PRINTER

Information text

PRESENT VALUE = NOT DEFINED
= No printer connected

PRESENT VALUE = DEFINED
= Printer connected

Default value

No printer connected

Menu selection

DEFINE = printer connected
UNDEF = no printer connected
BREAK = no change required

Parameter

If a printer is connected to the control system, the parameter BAUD RATE is used to determine the data transmission speed for printer printout.

Guide text

BAUD RATE = Def.range
300 = Transmission speed 300 Baud (bit/second).
1200 = Transmission speed 1200 Baud.

Default value

300 = Transmission speed 300 Baud.

5.2.4.9
MONITOR (display screen)

Description

The parameter MONITOR BOARD is used to define the function readout on the monitor display screen of program and error code buffer. The control system must be equipped with a monitor (option) before activation of this parameter.

Menu

IN/OUT + MONITOR

Def. range

0 = No readout on monitor display screen.
1 = if LCD-screen is used.
2 = if CRT-screen is used.

Default value

0 = No readout on monitor display screen.

5.2.4.10
SYS (Reservation system I/O)

Description

Menu selection to define if digital inputs 9-16 and digital outputs 9-16 on a digital I/O board are to be reserved for use as system I/O.

Sub-menu

IN/OUT + I/O USE + SYS

Information text

PRESENT VALUE = NOT DEFINED
= System I/O not reserved.

PRESENT VALUE =DEFINED
= System I/O reserved.

Default value

System-I/O not reserved.

Menu selection

DEFINE= Reserve system I/O.
UNDEF = No system I/O reserved.
BREAK = No change required.

Parameter

If system I/O is reserved, the parameter BOARD POSITION is used to define the board position where digital inputs 9-16 and digital outputs 9-16 are reserved as system I/O.

Menu

The resulting question after DEFINE above.

Guide text

BOARD POSITION =

Def. range

1-6 corresponding to board place 1-6.
Note: It is recommended to reserve system I/O on the last I/O board, and to define the same I/O board for panel I/O board for panel I/O, if used.

Default value

No board place is defined.

5.2.4.10A
ESAB-I/O

Description

Menu selection to define if digital inputs 9-16 and digital outputs 9-16 on digital I/O board 3 are to be reserved for use as ESAB I/O.

Sub-menu

IN/OUT + I/O USE + ESAB

Information text

PRESENT VALUE = NOT DEFINED
= ESAB I/O not reserved.

PRESENT VALUE =DEFINED
= ESAB I/O reserved.

Default value

ESAB-I/O not reserved.

Menu selection

DEFINE^ Reserve ESAB I/O.
UNDEF = No ESAB I/O reserved.
BREAK = No change required.

Parameter

If ESAB I/O is reserved, BOARD POSITION 3 is used where digital inputs 9-16 and digital outputs 9-16 are reserved as ESAB I/O.

Note

See also section 3.10.5

Guide text

BOARD POSITION =

5.2.4.11
PANEL, Reservation panel I/O

Description

Menu selection is defined if digitla inputs 1-8 and digital outputs 1-8 or a digital I/O board in the control cabinet are to be reserved for use as panel I/O.

Menu

IN/OUT + I/O USE + PANEL

Information text

PRESENT VALUE = NOT DEFINED
= Panel I/O not reserved.

PRESENT VALUE = DEFINED
= Panel I/O reserved.

Default value

Panel I/O not reserved.

Menu selection

DEFINE= Reserve panel I/O
UNDEF = No panel I/O reserved
BREAK = No change required.

Parameter

If panel I/O is reserved, the parameter BOARD POSITION is used to define which board position 1-6 that is reserved for panel I/O.

Menu

Resulting question after DEFINE above.

Guide text

BOARD POSITION =

Def. range

1-6 corresponding to board position 1-6.
Note: It is recommended to reserve panel I/O on the last I/O board, and to define the same I/O board for system I/O, if used.

Default value

No board position reserved.

5.2.4.12

ROBOT, working range

Description

The parameters Al - to A6+ are used to provide software limits to the working ranges of the robot axes 1 to 6 in both movement directions. The working range is defined as the angle, in degrees, from which the axis can be run in positive or negative directions from the normal calibration position (synchronization postion).

Menu

AXIS + ROBOT

Guide text

Al- = Negative direction axis 1
Al+ =
s
A6- =
A6+ = Positive direction axis 6

Def. range

1. The angle is to be specified in whole degrees and with sign.
2. Max. and min. value for the parameters Al- to A6+ must be within the working range marked in the figure below.
   Default value

The default values are shown in the figures below:

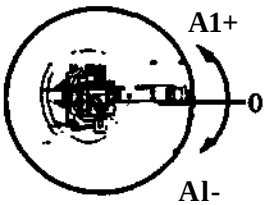

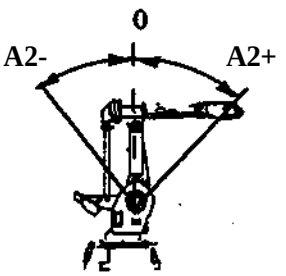

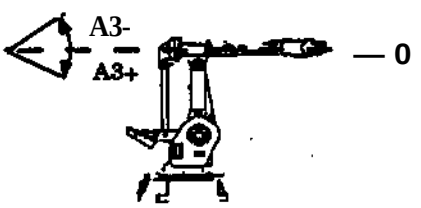

MAIN **AXES**

Axis 1 limits:

A1+ +179.9° l)
Al- -179.9° l)

l) Program unit shows 180°

Axis 2 limits:

A2+	IRB 2000	+100°
	IRB 3000	+90°
	IRB 3200	+90°
	IRB 6000	+70°
	IRB 6000/S3.0-100	+140°
A2-	IRB 2000	-110°
	IRB 3000	-110°
	IRB 3200	-110°
	IRB 6000	-70°
	IRB 6000/S3.0-100	+10°

Axis 3 limits:

A3+	IRB 2000	+160°	>*
	IRB 3000	+150°	
	IRB 3200	+150°	
	IRB 6000	+105°	
	IRB 6000/S3.0-100	+155°	
A3-	IRB 2000	-170°	
	IRB 3000	-170°	
	IRB 3200	-170°	
	IRB 6000	-28°	
	IRB 6000/S3.0-100	+52°	

*Value include axis 2

Wrist Axes

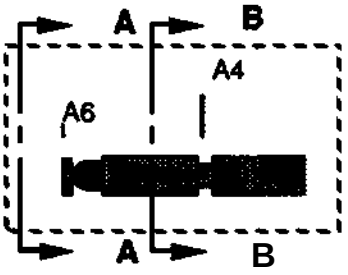

A4+
+200°
IRB 6000
+300°
IRB 6000 /2.25PE-75 PT
+200°

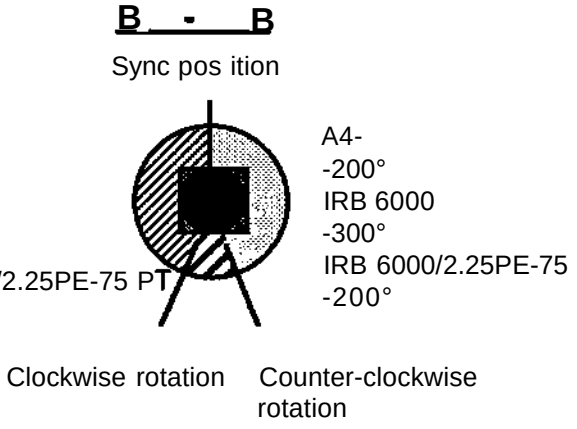

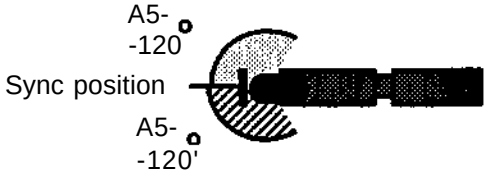

The sync position for axis 6 is defined by the position of the guide hole. The guide hole is to be at 12 o'clock or at 6 o'clock for a sus- pended robot

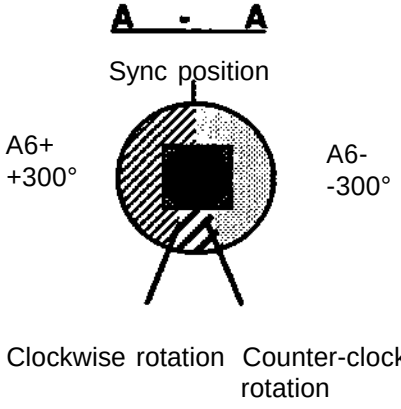

5.2.4.13
AXIS 7-12, internal and external drives
MH/GIVSW

During axis definition it is possible to define axis 7 as internal or external. An internal axis has an integrated drive unit on the control system where as an external axis has an external drive unit. If axis 7 is defined as internal then independent movement of this axis is not permitted.

AW

Any axes can be defined as internal, up to 6 axes can be defined, only one can be active. See STATION chapter 5.2.4.15.

External axes with external drive units demands that aaxis board, DSQC 233, is placed at board position in rack (see fig. in chapter 3.10).
For external axis 7 with internal drive unit demands a serial measurement board DSQC 253 placed in connection to the axis (track motion).

Basic definition 1

Description
Menu selection to define whether the robot system includes an external axis 7 or not
icMenu
AXIS + AXIS 7

Information text
PRESENT VALUE = NOT DEFINED
= Axis 7 not defined in the control system.

PRESENT VALUE = DEFINED
= Axis 7 defined in the control system.

Menu selection

DEFINE = Define axis 7 with its working range (see below)
UNDEF= Undefine axis 7
BREAK = No change required

Basic definition 2

Description

Menu selection to define whether or not the robot system is equipped with the external axes 8-12.

Menu

AXIS + EXTAX + A8 12
(X stands for the required axis concerned)

Information text

PRESENT VALUE = NOT DEFINED
= The axis in question is not defined in the control system.

PRESENT VALUE = DEFINED
= The axis in question is defined in the control system.

Default value

The axis in question is not defined in the control system.

Menu selection

DEFINE = Define the axis in question
UNDEF = Undefine the axis in question
BREAK = No change is required

Working area, axes 7-12

Description

Menu selection to define whether or not the axis in question has defined working area. Normally is a working range definined for external axes. For rotating axes that are used as external axis the parameter be undefinined.

Menu

AXIS + EXTAX + AX or AXIS+AXIS 7
(X in AX is the number of the axis in question)

Info text

PRESENT VALUE = DEFINED
= The axis in question has a working area defined.

PRESENT VALUE = NOT DEFINED
= The axis in question has no working area defined.

Default value

The axis in question has a working area defined.

Menu selection

DEFINE = Define the working area in question.
UNDEF = Undefine the working area in question

Parameter I and II

The parameters AX- and AX+ (X being the number of the axis concerned) are used to program a limitation of the working range of one of the external axes 7-12 in both of its

directions of movement. The working range is defined as the number of motor increments (1 motor revolution = 1024 increments) which the axis can run in a positive or negative direction from the synchronization position.

Menu

Resulting question from DEFINE above.

Guide text

AX- = Working range negative direction
AX+= Working range positive direction
(X is the number of the axis in question)

Def. range

Max. numerical value of motor increments entered, 2147483640
Min. numerical value of motor increments, 0
The numerical value must be given with a sign (minus sign for axis AX- and no sign for AX+)

Default value

Working range not defined

Note

1. The synchronization position for the different axes must be within the working range for the axis concerned.
2. If, it is not possible to create a correct working range with the parameter values this sequence can not be concluded and the system will request parameter I again.

Position regulator, axes 7-12

Parameter III

The parameter KP specifies the gain in the position regulator. The gain must be set in relation to each mechanical unit. This can be performed with the help of function TRIM under the MANUAL menu. See further in chapter 6. If a suitable value obtained when trimming is to be permanent in the system, the value must be read in here as the system parameter KP.

Menu

Resulting question after reading in as described above.

Guide text

KP =

Def. range

0.0 - 127.0 in Si-unit: Per second (1/s)

Default value

The gain is undefined.

Note

1. Values of the gain which can be used in practice are of the order of 5 for high inertia to 20 for low inertia mechanical units.
2. With ENTER without data and undefined gain, the sequence cannot be left and the system restarts with parameter III.

Motor speed, axes 7-12

Parameter IV

The parameter MSPEED (RPM) = gives the maximum speed for the motor of the external axis. (For gear ratio 1:1 between resolver and motor).

Menu

Resulting question after reading in in accordance with the above.

Guide text

MSPEED (RPM) =

Def. range

74 - 3000 rpm

Default value

Internal drive unit = 1050 rpm
External drive unit = 3000 rpm

Note

1. A.C. motor for an internal axis has a maximum speed of 2600. (Automatically adjusted to 2600 rpm if entering higher value.)

2. The speed reference from the controller can reach a value of about 6 % above the defined value. The motors should therefore be capable of speeds up to 10 % over the above maximum speeds.

Test speed, axes 7 -12

Parameter V

The parameter TEST SPEED (%) =, gives the maximum speed for the motor of the external axis in percent of parameter IV, MSPEED (RPM).

Menu

Resulting question after reading in, in accordance with the above.

Guide text

TEST SPEED (%) =

Def.range

1,0-25,0 %

Default value

Axis 7-12 = 10,0 %

Note

Test Speed means the maximum speed for the motors (1) during manual movement of the robot with joystick and (2) during program execution in operation mode TEACH.

Control from internal or external drive unit

Parameter VI,

MH/GUSW axis 7 only
AW axes 7 -12.

Parameter (AXIS 7 INTERNAL) defines whether axis 7 is controlled from an internal or external drive unit.

One additional (optional) a.c. motor can be controlled by the control system in addition to the 6 robot axes. The a.c. control is activated by selecting axis 7 as an internal axis. This can be used for example for a travel motion.

Even when defining the axes 8-12 the question whether the axis is to be internal comes up.

Menu

Resulting question after reading in in accordance with 5.2.4.13 for axis 7.

Guide text

AXIS 7 INTERNAL =

Def. range

0 = Axis 7 with control from external drive unit.
1 = Axis 7 with control from internal drive unit.

Default value

0 = Axis 7 with control from external drive unit

Note

When defining axis 7 with control from an internal drive unit, the standard drive unit DSQC 236 C (IRB 2000/3000/3200) or DSQC 236 T (IRB 6000) must be installed and that serial measurement board is used.

If axis 7 is selected with control from an internal drive unit, the digital speed control is activated in addition to the a.c. control. This must be trimmed in relation to the mechanical unit using the TRIM function. See further chapter 6. If the values obtained are suitable and are to become permanent in the system, the value can be read in here as system parameters.

A short description of the PID controller system parameters follows.

Parameter VII, Internal drive unit, axis 7
Proportional gain (P-part).

Menu
Resulting question after definition of axis 7 with control from internal drive unit.

Guide text
P GAIN (TIMES) =

Def. range
0.0 -127.0 times

Default value
17 times for IRB 2000 Track Motion
16 times for IRB 3000 Track Motion
17 times for IRB 6000 Track Motion

Note
Values practically usable, approx. 5 for low inertia to 25 for high inertia mechanical units.

Parameter VIII, Internal drive unit, axis 7
Integration time (I-part).

Menu
Resulting question according to the above.

Guide text
I TIME (S) =

Def. range
0.000 - 2.500 sec

Default value
0.25 sec for IRB 2000
0.5 sec for IRB 3000
X sec for IRB 6000

Note
Values practically usable, approx. 0.2 - 0.4 sees. The shorter time, the faster the integration.

Parameter IX, Internal drive unit, axis 7
Number of poles

Menu
Resulting question according to the above.

Guide text
Motor poles =

Def. range
4 or 6

Default value
6

Note

Parameter X, Internal drive unit axis 7
Max allowed motor torque

Menu Resulting question according to the above.

Guide text
Torque max. (%) =

Def. range
0-100%

Default value

IRB6000	70%
IRB 2000,3000	92%

Note

Parameter XI
Drive unit
Selecting type of drive unit for the internal axis 7

Menu
Resulting question of drive unit for the internal axis 7

Guidtext
DRIVE UNIT =
Selected type of drive unit from the meny

Default value

IRB 6000	T = Drive unit
IRB 2000, 3000	C = Drive unit

Type of motion, axes 7-12.

Description
Menu selection to define if an independent external axis controls a linear movement or a rotating movement.

Menu
Resulting question from definition of external axis with external drive unit.

Guide text
TYPE OF MOTION ?

Def. range
ROT or LIN

Default value
LINEAR

Gear ratio, axes 7-12

Description

The parameters XII and XIII define the gear ratio between the motor and the external axes in question.

Menu

Resulting question from definition of external axis which has been defined as independent external axis.

Guide text

LOW GEAR RATIO = (parameter XII)
HIGH GEAR RATIO = (parameter XIII)

Def.range

1-5000, resolution 1

Default value

Low gear ratio = 1
High gear ratio = 1

Note

The quotient between low and high transmission parameter must give a finite numbers of decimals. It will results in error in the calculation algorithm.

Ex. Low/ High = 1/3 = 0.333.....not working
Low/ High = 1/8 = 0.125 working

Velocity reference axes 7-12

Parameter XIV External drive unit axis 7-12.

Specifies which voltage level of the speed reference to the motor for the external axis concerned, should correspond to the specified maximum speed.

Menu

Final question for axes 7-12 with external drive unit.

Guide text

MSREF(V) =

Def. range

0.0 - 9.4 V. NOTE! The speed reference voltage has a 12 bit resolution. With a specified 9.4 Voltage level, a disturbance on the least significant bit will result in a fluctuation in the speed reference. The amplitude of the fluctuation will be appox. 5 mV. One should be aware of this, especially in applications with low transmission gear ratios.

Default value

9.4 V. (Do not enter a higher value than 9.4 V)

5.2.4.14
BRAKE

Description

The parameters Al to A12 are used to define whether the system robot axes and external axes are equipped with mechanical brakes or not. The control system uses the parameters to determine if the servo control should be deactivated or not when BRAKE ON are activated.

Menu

AXIS + BRAKE

Guide text

Al = Robot axis 1
~
A6 = Robot axis 6
A7 = External axis 7
~
A12 = External axis

Def. range

0 = The axis concerned has no brake.
1 = The axis concerned is equipped with a brake.

Default value

Al - A6 = 1 Axis brake.
A7-A12= 0 No axis brake.

Warning

It is important that the system parameters for brakes are defined so that they correspond to the actual brake equipment on the different axis. With incorrect definitions, the following can happen when BRAKE ON is commanded in the system after a time in the MOTOR ON mode with an inactive robot:

- If an axis without brake is defined with a brake (= 1), the robot can collapse because the servo control is deactivated when the brakes are to be applied.
- If an axis with a brake is defined without a brake (= 0), the robot will go to MOTOR OFF with a jam error because power is applied to the motor despite the application of the brake.

Note for external axes 8-12 and external axis 7 with external drive unit: When application of the brake is commanded, a common brake signal, EXT BRAKE CONTROL connected to external axes with brakes is activated. This signal must also be used to block the servo of the external axes to prevent the speed controller from integrating up to the current limit. To avoid dipping when brakes are applied, a time delay relay should be used on the signal to block the servo.

5.2.4.15
STATION (AW only)

Sharing of external axes on stations.

Description

The parameter area STATION is used to distribute the external axes to the stations to permit activation of the external axes in suitable groups. The stations can be activated/deactivated independently except when axes share a common drive unit. Six stations are available; A, B, C, D, E and F.

Menu

AXES + EXTAX + STATION

Information text

A NOT DEFINED
= station A is not defined
A*: INP11 OUTP1 AXES:7 12 ->
= station A consists of the axes 7 and 12, activated with output 1 and that the activation is acknowledged at input 11. The asterisk indicates that the station is to be synchronized separately from other asterisk-marked stations. The arrow indicates that several stations are defined.

Note

All stations are normally undefined. Station A must be defined first before any other station can be defined.

Menu selection

DEF = define or change station
ODEF = erase station
NEXT = show next station
BREAK = interrupt presentation/change of station

INPUT

The input which is to be used to give an acknowledgement that the station in question is activated is specific here.

Menu

The first question after DEF above.

Guide text

INPUT No =

Permitted values

The following inputs are permitted: 11,12,13,14, 15 and 16. If the station is undefined, a value must be specified.

OUTPUT

The output which is to be used with activation/deactivation of the station in question is specified here.

Menu

Second question after DEF above.

Guide text

OUTPUT No =

Permitted values

Outputs between 1 and 128 can be used. If output number 0 is presented, a value must be specified.

AXES

The external axes which are to belong to the station in question are specified here.

Menu

Continued question after DEF above.

Guide text

AXIS No =

Permitted values

The external axes 7, 8, 9,10,11 and 12 are permitted.

Note

The request for the axis number is repeated until answered without specification of an axis number. When the request for the first axis number is received, that which was entered previously can be provided by responding without specifying a number. It is also possible to begin again and enter new axis numbers. At least one axis must be specified and a maximum of six can be specified.

SHARED DRIVE UNITS

Finally it is specified if the station is to be synchronized separately from another station. E.g. if axis from different stations share the same drive unit.

Menu

The last question after DEF above

Guide text

COMMON DRIVE UNIT ?

Permitted values

YES or NO. YES is marked with an asterisk at the beginning of the information text, which then specifies that the station is to be synchronized separately from other asterisk-marked stations.

Note

The asterisk-marked stations are synchronized in a sequence beginning from the last and the first is synchronized together with those not marked. After the synchronization, all of the stations are deactivated except A.
An axis can not belong to more than one station.

5.2.4.16
GRIPPER

Description

The parameter GRIPPER specifies the number of grippers in the robot system, and the digital outputs that are to be reserved for connection of grippers 3-8.

Parameter I

The parameter specifies the number of grippers in the robot system.

Menu

GRIPPER

Info text

PRESENT VALUE =

Guide text

NO OF GRIPPERS =

Def. range

3-8 grippers

Default value

2 grippers

Parameter II

The parameter specifies the logical digital output which **gripper 3** is to be connected to.

Menu

Resulting question.

Info text

PRESENT VALUE =

Guide text

OUTPUT NO (GRIPPER 3) =

Def. range

Logical digital output 1-128.

Default value

Logical digital output 9.

Note

When 4-8 grippers are specified under "Parameter I" above, the control system will automatically reserve the number of logical digital outputs required, wit the consequent numbers higher than the output specified under "Parameter II".

5.2.4.17
ARM

The parameters in accordance with the sections below are used to obtain the maximum performance of the robot, in regards to maximum acceleration and deceleration. These parameters affect the control of the servo regulation.

Equipment at the upper arm

The following parameters are used to define the equipment fixed to the upper arm of the robot with respect to weight and position of the centre of gravity. In cases with several masses the position and sizes of the joint centre of gravity must be calculated.

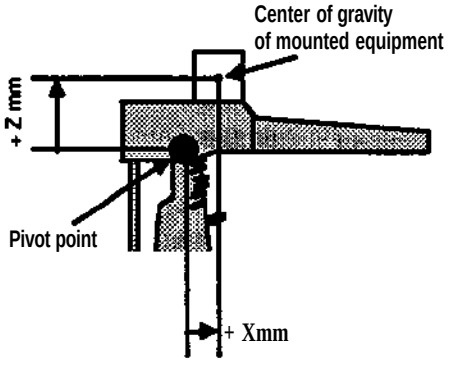

Parameter I
The parameter indicates the weight of the equipment concerned.

Menu
LOAD + ARM

Guide text
MASS (KG) =

Def. range

IRB2000	**IR63000**	**IRB3200**	**IRB6000**	
0-15 **kg**	0-15 **kg**	0-15 **kg**	2.4-120	155 kg
			2.4-150	185 kg
			2.8-100	135 kg
			3.0-75	95 kg
			S3.0-100	135 kg
			2.25PE-75	110 kg
			2.8PT	135 kg

Default value

1KB 2000	**1KB 3000**	**IRB3200**	**1KB 6000**
Okg	Okg	Okg	Okg

Permitted values

IRB2000	**IRB3000**	**IRB3200**	**1KB 6000**
0-5 **kg**	0-15 **kg**	0-10 **kg**	Ace. to def. irange. See Description chapter 5.1.7 for limitation.

Parameter II

The parameter specifies the distance from the axis of rotation between the lower and upper arm to the centre of gravity of the equipment measured parallel with the upper arm. Shown as X in the figure above.

Menu

Resulting question

Guide text

X(MM) =

Def. range

1KB 2000	IRB 3000, IRB 3200	IRB6000	
- 380 to + 850 mm-	450tol+500 mm	2.4-120	-400 to +1000
		2.4-150	-400 to +1000
		2.8-100.2.8PT	-400 to+1410
		3.0-75	-400 to +1610
		S3.0-100	-400 to +1410
		2.25PE-75	-400 to +1000

Default value

1KB 2000	IRB 3000,1KB 3200	IRB 6000
0	0	0

Permitted value

1KB 2000	IRB 3000,1KB 3200	IRB 6000
-315to±0	- 450 to + 500	Ace to def. range

Note

If the guide text X (INCH) = is shown, inches are used in reading-in and reading-out (1 inch = 25.4 mm). See the manual Description concerning permitted position of extra load.

Parameter III

The parameter specifies the distance from the centre joint between the lower arm and the upper arm to the centre of gravity of the equipment (perpendicular to the upper arm), shown as Z in the figure above.

Menu Resulting and final question.

Guide text Z (MM) =

Def. range

IRB 2000	IRB 3000 JRB 3200	IRB 6000
-310 to +310 mm	-150 to +450 mm	-150 till+450 mm
(-12 to +12 inch)	(-6 to +18 inch)	(-6 to +18 inch)

Default value

IRB 2000	IRB 3000JRB 3200	IRB 6000
0	0	0

Permitted value

IRB 2000	1KB 3000JRB 3200	IRB 6000
-100 till +310	-150 till +450	-200 till +450

Note

If the guide text Z (INCH) =) is shown, inches are used in reading-in and reading-out (1 inch = 25.4 mm). See also manual Description concerning permitted position of extra load.

5.2.4.18
WRIST

Description

The parameters in the section below are used to obtain the maximum performance of the robot, especially concerning maximum acceleration and deceleration. These parameters affect the control of the servo regulation. The default values are such that they correspond to the working conditions of a heavily loaded robot. To avoid overloading the robot, the distances and the corresponding maximum loads given in the load diagrams must not be exceeded. The load diagram are given in the description of the robot.

The parameter below is used to define the load fixed at the robot wrist (axis 6) with respect to its weight and the position of its centre of gravity. In other words, the nature of the normal load.

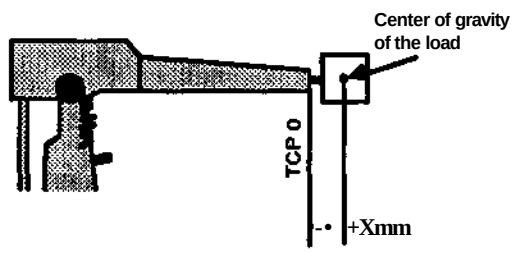

Parameter I

The parameter specifies the weight of the load.

Menu LOAD + WRIST

Guide text MASS (KG) =

Def. range

IRB 2000	IRB 3000	IRB 3200	IRB 6000	
0-10 kg	0-30 kg	0-10 kg	2.4-120	0-120kg
			2.4-150	0-150 kg
			2.8-100PT	0-100 kg
			3.0-75	0-75kg
			S3.0-100	0-100 kg
			2.25 PE-75	50-75 kg

Default value

IRB 2000	IRB 3000	IRB 3200	IRB 6000	
10 kg	30 kg	10 kg	2.4-100	100 kg
			2.4-150	150 kg
			2.8-100PT	100 kg
			3.0-75	75 kg
			S3.0-100	100 kg
			2.25PE-75	75 kg

Permitted value

According to load diagram chapter 5 in Description

Parameter II

The parameter specifies the distance from TCP 0 to the load centre of gravity with designation X in accordance with the figure above.

Menu

Resulting and final question.

Guide text

X(MM):=

Def. range

1KB 2000	**1KB 3000**	**1KB 3200**	**1KB 6000**
0 - 430 mm	0 - 650 mm	0 - 430 mm	0-650 mm
(0 -18 inch)	(0 - 25 inch)	(0 -18 inch)	(0-25 inch)

Default value

IRB2000	**IBB 3000**	**1KB 3200**	**IRB6000**
+84 mm	+230 mm	**+84 mm**	+270 mm
			2.4-150 +370 mm

Note

If the guide text X (INCH) = is shown, inches are used in reading-in and reading-out (1 inch = 25.4 mm).

5.2.4.19 HOLDRC

Description

Control Hold-to run

Active parameter (=1) means that in theone off, the following function buttons must be kept depressed for execution. When the buttons is released, the robot stops.

PROGST
INST
BWD
ALIGN (MH/GIVSW)
SYNC
EXTALIGN (AW)

VARNING! Hold- to-run should always be active to avord injury. If not active the robot does not stop at release of above buttons.

Menu

SAFETY + HOLD RC

Info text

PRESENT VALUE = 1
= Hold-to-run is active

Def.range

0 = Hold-to-run is activein MANUAL FULL SPEED
1 = Hold-to-run is active

Default value

1

5.2.4.19A
EM-STOP (Emergency stop)

Description

The parameter DIG.OUTPUT RESET states if the general digital outputs should be set to zero at emergency stop. The outputs are restored to its former condition when the emergency stop is reset and the system is taken in operation mode again or if the stand by button is pressed.

Menu

SAFETY + EM-STOP

Info text

PRESENT VALUE = 0
= Parameter is passive

Guide text

DIG. OUTPUT RESET=

Def.range

0 = Emergency stop have no influence on the outputs
1 = Outputs will be reset at emergency stop.

Default value

0

Warning!

If the parameter DIG.OUTPUT RESET is set to 1:

It is very important that the peripheral equipment is adapted to that all outputs are reset at emergency stop and automatically restored to its former condition when the emergency stop is reset.

5.2.4.19B
AUTOK (AUTO control)

Under this menufunctions in AUTO mode can be blocked. When a function is choosen to be not permitted and a corresponding key is pressed, the following fault statement is shown on the display "14 AUTO MODE/LOCKED COMMAND". The functions are available as sub-menus to menu AUTOK and are the following:

5.2.4.19B.1
EDIT

Description

The EDIT parameter exists for blocking of all editing functions under the EDITING button in AUTO. In MANUAL mode editing operates, as previously, irrespective of whether blocking has occurred.

Menu

SAFETY + SCAN + AUTOK + EDIT

Info text

FUNCTION IN AUTO =

Def.range

BLOCKED = The function cannot be performed in AUTO mode
UNBLOCKED = The function can be performed in AUTO mode

Default value

UNBLOCKED

5J2.4.19B.2
HAND

Description

The HAND parameter exists for blocking of manual functions under the MANUAL button in AUTO mode. In MANUAL mode HAND operates, as previously, irrespective of whether blocking has taken place.

Menu

SAFETY + SCAN + AUTOK + HAND

Info, text

FUNCTION IN AUTO =

Definition range

BLOCKED = The function cannot be performed in AUTO mode
UNBLOCKED = The function can be performed in AUTO mode

Basic state

UNBLOCKED

5.2.4.19B.3
GRIPPER

Description
The GRIPPER parameter exists for blocking of the gripper buttons on the programming unit in AUTO mode. In MANUAL mode, the GRIPPER buttons operate, as previously, irrespective of whether blocking has taken place.

Menu
SAFETY + SCAN + AUTOK + GRIPPER

Info, text
FUNCTION IN AUTO =

Definition range
BLOCKED = The function cannot be performed in AUTO mode
UNBLOCKED = The function can be performed in AUTO mode

Basic state
UNBLOCKED

5.2.4.19B.4
PROCESS ORIDE

Description
The ORIDE parameter, under the AUTOK menu, exists for blocking of the ORIDE function in AUTO mode. When the parameter is blocked, it is not possible to use the ORIDE function in a glueing instruction or in a welding instruction in AUTO mode. In MANUAL mode the ORIDE function, as previously, operates irrespective of whether blocking has taken place.

Menu
SAFETY + SCAN + AUTOK + ORIDE
Info, text
FUNCTION IN AUTO =

Definition range
BLOCKED = The function cannot be performed in AUTO mode
UNBLOCKED = The function can be performed in AUTO mode

Basic state
BLOCKED

5.2.4.19B.5
SPEED

Description
The SPEED parameter, under the AUTOK menu, exists for blocking of the SPEED correction in AUTO mode. The speed is altered using the two buttons "+%" and "-%" on the programming unit. When the parameter is blocked, it is not possible to use the speed correction in automatic state. In MANUAL mode, speed correction function, as previously, operates irrespective of whether blocking has taken place.

Menu
SAFETY + SCAN + AUTOK +ORIDE

Info, text
FUNCTION IN AUTO =

Definition range
BLOCKED = The function cannot be performed in AUTO mode
UNBLOCKED = The function can be performed in AUTO mode

Basic state
BLOCKED

5.2.4.19B.6
STOP

Description

The STOP parameter, under the AUTOK menu, exists for blocking of the program stop button on the programming unit in AUTO mode. When the parameter is blocked, it is not possible to use the key for program stop in AUTO mode.
In MANUAL mode, the stop function operates, as previously, irrespective of whether blocking has taken place.

Menu

SAFETY + SCAN + AUTOK + STOP

Info, text

FUNCTION IN AUTO =

Definition range

BLOCKED = The function cannot be performed in AUTO mode
UNBLOCKED = The function can be performed in AUTO mode

Basic state

BLOCKED

5.2.4.19B.7
RESET

Description

The RESET parameter exists for blocking of the RESET function under MANUAL in automatic operating mode. In manual operating mode the RESET function operates, as previously, irrespective of whether blocking has taken place.

Menu

SAFETY + SCAN + AUTOK + RESET

Info, text

FUNCTION IN AUTO =

Definition range

BLOCKED = The function cannot be performed in AUTO mode
UNBLOCKED = The function can be performed in AUTO mode

Basic state

UNBLOCKED

5.2.4.19B.8
PROGST

Description

The PROG ST parameter exists for blocking of the PROG ST function and AW REST in the welding system under the AUTO menu in AUTO mode. In MANUAL mode, the PROG ST and AW REST function operates, as previously, irrespective of whether blocking has taken place.

Menu

SAFETY + SCAN + AUTOK +PROG ST

Info, text

FUNCTION IN AUTO =

Definition range

BLOCKED = The function cannot be performed in AUTO mode
UNBLOCKED = The function can be performed in AUTO mode

Basic state

UNBLOCKED

5.2.4.19B.9
INSST

Description
The INS ST parameter exists for blocking of the INS ST function under AUTO in AUTO mode. In MANUAL mode, the INS ST 1 function operates, as previously, irrespective of whether blocking has taken place.

Menu
SAFETY + SCAN + AUTOK + INS ST

Info, text
FUNCTION IN AUTO =

Definition range
BLOCKED = The function cannot be performed in AUTO mode
UNBLOCKED = The function can be performed in AUTO mode

Basic state
UNBLOCKED

5.2.4.19B.10
BWD

Description
The BWD parameter exists for blocking of the BWD function under AUTO in AUTO mode. In MANUAL mode, the BWD function operates, as previously, irrespective of whether blocking has taken place.

Menu
SAFETY + SCAN + AUTOK + BWD

Info, text
FUNCTION IN AUTO =

Definition range
BLOCKED = The function cannot be performed in AUTO mode
UNBLOCKED = The function can be performed in AUTO mode

Basic state
UNBLOCKED

5.2.4.19B.11
DISPL

Description
The DISPL parameter exists for blocking of the DISPL function under AUTO in AUTO mode and in program running. In MANUAL mode, the DISPL function operates, as previously, irrespective of whether blocking has taken place.

Menu
SAFETY + SCAN + AUTOK + DISPL

Info, text
FUNCTION IN AUTO =

Definition range
BLOCKED = The function cannot be performed in AUTO mode
UNBLOCKED = The function can be performed in AUTO mode

Basic state
UNBLOCKED

5.2.4.19B.12
SYNC

Description
The SYNC parameter exists for blocking of the RE SYNC function under the AUTO menu and the function SYNC in AUTO mode. In MANUAL mode, the RESYNC and SYNC functions operate, as previously, irrespective of whether blocking has taken place.

Menu
SAFETY + SCAN + AUTOK + SYNC

Info, text
FUNCTION IN AUTO =

Definition range
BLOCKED = The function cannot be performed in AUTO mode
UNBLOCKED = The function can be performed in AUTO mode

Basic state
UNBLOCKED

5.2.4.19B.13
SIM

Description
The SIM parameter exists for blocking of the SIM function under AUTO in AUTO mode and in program running. In MANUAL mode, the SIM function operates, as previously, irrespective of whether blocking has taken place.

Menu
SAFETY + SCAN + AUTOK + SIM

Info, text
FUNCTION IN AUTO =

Definition range
BLOCKED = The function cannot be performed in AUTO mode
UNBLOCKED = The function can be performed in AUTO mode

Basic state
UNBLOCKED

5.2.4.20
GLUE

Description
Define the function package which is to be used by the robot system.

Menu
OPTION

Guide text
GLUE =

Def. range
0 = The software is **not** used.
1 = The software is used.

Default value
GLUE=0

5.2.4.21
MODPOS

Description

The operator is asked if the position should be modefied or not.

Menu

MODPOS

Default value

Not defined

5.2.4.22
HP MODE

Description

The parameter RP MODE specifies the working mode of the instruction STORE POSITION in the IRB 2000 AW software. Two different modes can be specified for position storage:

- **Compensation for a parallel displacement, caused by an active reference point, is made to the current robot position.** If a reference point is not active, the current robot position only is stored (def. = 0).

- **The current robot position is always stored.** Compensation for a parallel displacement, caused by an active reference point, is not added to the position (def. = 1).

Menu

AUTO+ RP MODE

Guide text

REFERENCE POINT MODE =

Def. range

0 = Storage of current robot position compensated for parallel displacement caused by an active reference point.

1 = Storage of current robot position only.

Default value

0, storage of parallel displaced robot position if reference point is activated.

5.2.4.23
AW REST

Description

The function AW REST facilitates restarting of the welding process after an interruption. To make the welding seam as good as possible, the robot is moved to an optional position which it had 0 - 0.45 seconds before the interruption. Then the welding process is restarted with the same welding parameters as were used before the interruption.

Menu

AUTO + AW REST

Guide text

AW RESTART TIME (s) =

Def.range

0.00 - 0.45 s

Default value

0.20 s

Note

A restart attempt when it is not allowed will result in an error message:"NOT ALLOWED COMMAND" at the programming unit.

5.2.4.23A

PATH (Motion optimizing)

It is possible to run the robot speed optimized or path optimized. The cycle time is normally shorter with speed optimized than with path optimizing.

Note

Zone data under ZONE will be set to the default value if this parameter is changed. Therefore remember to install the zone size again when the parameter has been changed, if other values than the default value is required (see chapter 5.2.4.4).

Path optimizing will be installed if predefinition from PROM is used.

The system parameter for motion optimizing is installed as follows:

0 • Path optimized running

This is the default value when using predefinition from PROM. It is recommended to use path optimized running, if nothing else is required. Normal corner zones will be installed when path optimizing is installed. The motion will be stopped when changing from ROBOT- toRECT-coordinates.

1 **• Velocity optimized running**

Velocity optimized running gives a smoother velocity at the cost of the path quality. The robot will have the same path performance as old robots, without the SPF-function. Normal zero zone will be installed when velocity optimizing is installed. The motion is not stopped when changing from ROBOT- to RECT-ccordinates.

5.2.4.23B

CUR/ WIR (Arc welding software)

Description

Define CURRENT or WIRE SPEED to be used as welding parameters.

Menu

OPTION + CUR/WIR

Guide text

CUR (0)/ WIRE SPQ)

Def. range

0 = Current is used
1 = Wire speed is used

Default value

0, i.e. current

Note

If the parameter is changed, it is necessary to activate the system parameters before changing the corresponding output, (CURRENT or WIRE SP), see 5.2.4.24.

5.2.4.24
Application arc welding software

In arc welding applications, the welding voltage and welding current or wire speed are specified within a welding data field and added as an argument to the program instruction for the welding position.

The control system issues the relevant welding voltage as a voltage reference with definition range ±10 V at an analog output port which in turn controls the current source of the welding equipment. The definition range for the combined I/O is from 0 to +10V.

The control system also issues the relevant welding current/ wire speed as a reference with definition range ±10 V at an analog output port which in turn controls the wire feed unit of the welding epuipment. The definition range for the combined I/O is from 0 to +10V.

The principle of the conversion in the control system of programmed welding current to current reference in the form of reference voltage in volts is given by the following curve:

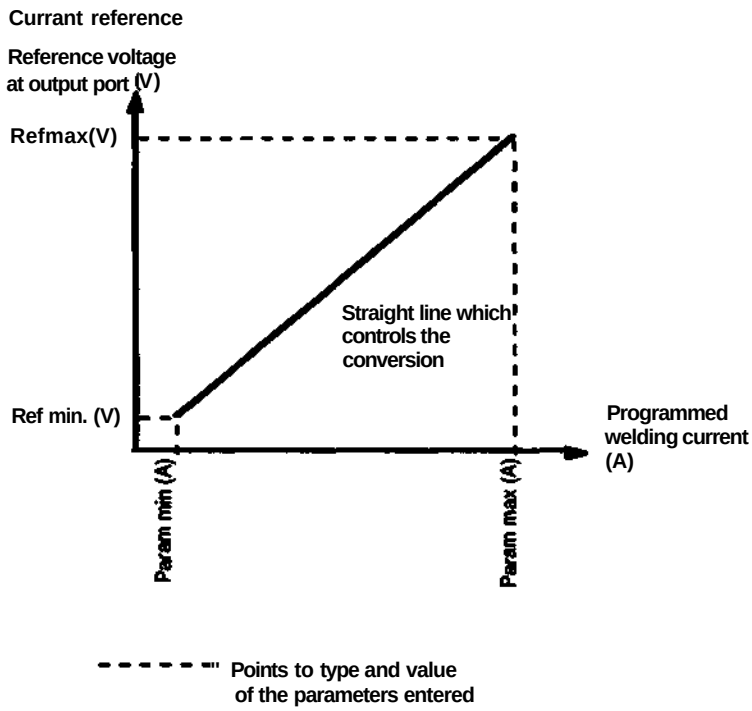

The same principle applies for the conversion by the control system of programmed welding voltage to a voltage reference in the form of a reference voltage in volts (PARAM MIN (A) is however designated PARAM MIN (V) etc.).

Port voltage reference

Description

The parameter VOLTAGE PORT defines which analog output port is to be used as voltage reference.

Menu

VOLT + PORT

Guide text

VOLTAGE PORT =

Def. range

Port 21-23 (combined I/O : Port 21-22)

Default value

Port 21

Note

Port 24 can be defined but the system then issues ±20 mA instead of +/-10 V. (Not valid for the combined I/O).

Control of voltage reference

Parameter I

The parameter PARAM MIN (V) defines the minimum welding voltage.

Menu

VOLT + VALUE

Guide text

PARAM MIN (V)

Def. range

-30.0-100.0 V

Default value

0 V

Parameter II

The parameter PARAM MAX (V) defines maximum welding voltage.

Menu

Resulting question.

Guide text

PARAM MAX (V) =

Def. range

-30.0 -100.0 V

Default value

100 V

Parameter III

The parameter REF MIN (V) defines the minimum voltage reference (reference voltage in V).

Menu

Resulting question.

Guide text

REFMIN(V) =

Def. range

-10.0 to +10.0 V

Default value

0 V

Parameter IV

The parameter REF MAX (V) defines the maximum reference voltage (reference voltage in V).

Menu

Resulting and final question.

Guide text

REFMAX(V) =

Def. range

-10.0 to+10.0 V

Default value

0 V

Note

If it is not possible to scale a permissible conversion curve with the parameter values this sequence can not be concluded, and the system will request parameter 1 again. This can happen if the values entered lie outside the permitted values, or if the Minimum value entered is higher then the Maximum value. The sequence can always be concluded by entering the default values.

Port for current reference

Description

The parameter CURRENT PORT defines which output port is to be used as current reference.

Menu

CURR + PORT

Guide text

CURRENT PORT =

Def. range

Port 21-23 (Combined I/= : Port 21-22)

Default value

Port 22

Note

Port 24 can be defined but the system then issues +/- 20 mA instead of +/-10 V. (Not valid for the combined I/O).

Control of current reference

Parameter I

The parameter PARAM MIN (A) defines the minimum current reference.

Menu

CURR + VALUE

Guide text

PARAM MIN (A) =

Def. range

0.0 -1000.0 A

Default value

0 A

Parameter II

The parameter PARAM MAX (A) defines the maximum current reference.

Menu

Resulting question.

Guide text

PARAM MAX (A) =

Def. range
0.0 -1000.0 A

Default value
1000 A

Parameter III
The parameter REF MIN (V) defines the minimum current reference.

Menu
Resulting question.

Guide text
REF MIN (V) =

Def. range
-10.0 to +10.0 V

Default value
0 V

Parameter IV
The parameter REF MAX (V) defines the maximum current reference.

Menu
Resulting and final question.

Guide text
REFMAX(V) =

Def. range
-10.0 to +10.0 V

Default value
0 V

Note
If it is not possible to scale a permissible conversion curve with the parameter values this sequence can not be concluded, and the system will request parameter I again. This can happen if the values entered lie outside the permitted values, or if the minimum value entered is higher than the maximum value entered. The sequence can always be concluded by entering the default values.

Port for wire speed reference

Description
The parameter WIRE SPEED PORT defines which output port is to be used as wire speed reference.

Menu
WIRE SP + PORT

Guide text
WIRE SPEED PORT =

Def. range
Port 21 - 23 (Combined I/O: Port 21 - 22)

Default value
Port 22

Note

Port 24 can be defined but the system then issues +/- 20 mA instead of +/-10 V.

Control of wire speed reference

Parameter I

The parameter PARAM MIN (M/MIN) defines the minimum wire speed.

Menu

WIRE SP +VALUE

Guide text

PARAM MIN (M/MIN)

Def. range

0.0 - 50.0 m/min (o -1968 inch/min)

Default value

0 m/min

Parameter II

The parameter PARAM MAX (M/MIN) defines the maximum wire speed.

Menu

Resulting question

Guide text

PARAM MAX (M/MIN)

Def. range

0.0 - 50.0 m/min (0 -1968 inch/min)

Default value

50.0 m/min

Parameter III

The parameter REF MIN (V) defines the minimum wire speed reference.

Menu

Resulting question.

Guide text

REFMIN(V)=

Def. range

-10.0-+10.0 V

Default value

0V

Parameter IV

The parameter REF MAX (V) defines the maximum wire speed reference.

Menu

Resulting question.

Guide text

REFMAX(V)=

Def. range

-10.0 - +10.0 V

Default value

10.0 V

Note

If it is not possible to scale a permissible conversion curve with the parameter values, this sequence can not be concluded, and the system will request parameter I again. This can happen if the values entered lies outside the permitted values or if the minimum value entered is higher than the maximum value. The sequence can always be concluded by entering the default values.

5.2.4.25 RESEQ

Parameter controlled renumbering

Description

The renumbering function parameter (RESEQ) is associated with an editing instruction with the same name. The function parameter is initially set to the value 1 which means that renumbering during editing is permitted. Renumbering is not permitted when the parameter is set to the value 0. If an attempt is then made to use the function, the following error message is presented: "NOT ALLOWED COMMAND".

Menu

OPTION + RESEQ

Info text

PRESENT VALUE =1

Guide text

RESEQUENCE ALLOWED =

Def.range

0 = Renumbering during editing not allowed
1 = Renumbering during editing allowed

Default value

1

5.2.4.26 SWELD (Spot Weld)

Description

The function parameter SWELD must be activated to get the weld function under the P-button. The parameters SWELD and GLUE can not be activated at the same time, because both uses the P-button. MH/ASM can be activated together with SWELD or GLUE. See Programming Manual S3 (3HAB 0002-2), chapter 12, for more detailed information.

Menu

OPTION + SCAN + SWELD

Info text

PRESENT VALUE = 0

Guide text

SWELD =

Def.range

0 = The weld instruction can not be programmed. Execution of earlier programmed instructions are however permitted.
1 = The weld instruction can be programmed with the P-button on the prog. unit.

Default value

0

5.2.4.27
SWL, (Spot Weld Interface)

Description

The parameter SWELD must be activated to get the SWI- function.

Menu

OPTION + SCAN + SWELD=1 + SWI

Info text

PRESENT VALUE = 0

Guide text

SWI =

Def.range

0 = The SWI instruction cannot be programmed or executed.
1 = Communication between robot and weld controller is performed via a standard I/O, DSQC 223.

Default value

0

Menu

Resulting question after SWI=1.

Guide text

Board position=

Def. range

The I/O-board can be placed in a optional position and receives I/O-number in the ordinary way. The standard function with sub-programs for control of the welding controller can be used even when the parameter SWI is activated.

5.2.4.28
RADR (rack address) (RIO board DSQC 239, see also chapter 5.2.4.7.2)

Description

The rack-address in question is set in decimals.

Menu

RADR

Guidetext

RACK-ADDRESS =

Def.range

0-63

Note! Please note that addressing is different from ABB decimal to Alen-Bradley octal. Some PLC:s first address is equal to ABB address 0.

RIO RACK ADDRESSING

RACK ADDRESS		
AB SERIES 2/30	AB SERIES 3/OR 5/	ABB ROBOT
1	0	0
2	1	1
3	2	2
4	3	3
5	4	4
6	5	5
7	6	6
	7	7
	1U	8
	ii	9
	12	10
	1J	11
	14	12
	lb	13
	1b	14
	i/	15
	20	16
	21	17
	22	18
	23	19
	I*	20
	2b	21
	26	22
	27	23
	JO	24
	31	25
	32	26
	11	27
	34	28
	35	29
	3b	30
	37	31

RACK ADDRESS	
AB SERIES 3/OR 5/	ABB ROBOT
40	32
41	33
42	34
43	35
44	36
45	37
46	38
47	39
50	40
51	41
52	49
53	43
54	44
55	45
56	46
57	47
60	48
61	49
62	50
63	51
64	52
65	53
66	54
67	55
70	56
71	57
72	58
73	59
7*	60
75	61
76	62
77	63

5.2.4.29
STQUART (starting quarter) (RIO board)

Description

The parameter starting quarter states which starting quarter the address is within.

Menu

STQUART

Guide text

STARTING QUARTER =

Def.range
0 - 3

Defaultvalue
0
(see fig. 5.2.4.7.1)

5.2.4.30
LASTR (last rack) (RIO board)

Description
Last rack is set if the RIO-board is the highest address on the PLC link. When this parameter is set the PLC-computer will not scan higher addresses.

Menu
LASTR

Guide text
LAST RACK =

Def.range
Oorl

Default value
0 = not last rack

5.2.4.31
DRATE (data rate) (RIO board)

Description
The data rate between the RIO-board and the PLC-equipment must correspond with the one that is set for the PLC-computer.

Menu
DRATE=

Guide text
DATA RATE =

Def.range
0 , 1 or 2 0= 57.6kbits/s
1= 115.2 kbits/s
2 = 230.4 kbita/s

Defaultvalue
0

5.2.4.32
ROTAX (MH/GL/SW)

Description
Active parameter (=1) means that an external axis, if it is defined as rotational, can be programmed to rotate several revolutions in one instruction.

Menu
OPTION

Info text
ROTATIONAL AXIS =

Def. range

0= parameter is passive
1= parameter is active

Defaultvalue

0

5.3 Resolver calibration

5.3.1 Resolver data in general

The resolver data is specified for each installed and calibrated motor package for the robot systems external and internal axes.
The resolver data consist of commutation and synchronizationoffsets for the different axes which are both determined by the angular position of the resolver under certain specific conditions.

The resolver data must NEVER changed without the external and internal axes of the robot system fulfilling these certain specific conditions.

See service manual.

It is not possible to change commutationoffset data for IRB 6000. The resolver is mounted and calibrated by the motor manufacturer.

5.3.2
Basic menu and submenus

The following basic menu for system parameters related to resolver data is given under PARAM + RESOLVE in the MANUAL menu on the programming unit.

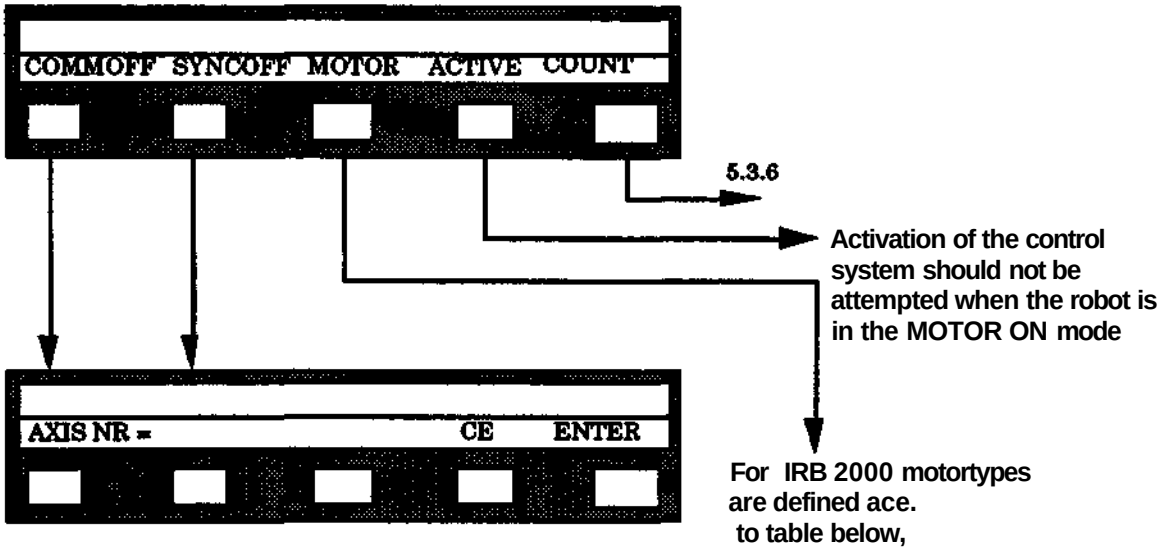

Motor-type	Article number		Axis
	IRB2OO0		
1	4429 548 - BX	1,3	**ELMO**
2	4429 548 - BW	2	**ELMO**
3	4429 584 - Bl	1-3	Siemens

If an attempt is made to take the robot into MOTOR ON without motortype defined, the following error message will be displayed: "542 MOTORTYPE NOT DEFINED" and the robot will remain in MOTOR OFF.

Sub menu for commutation offset (not for IRB 6000)

Sub menu to COMMOFF.

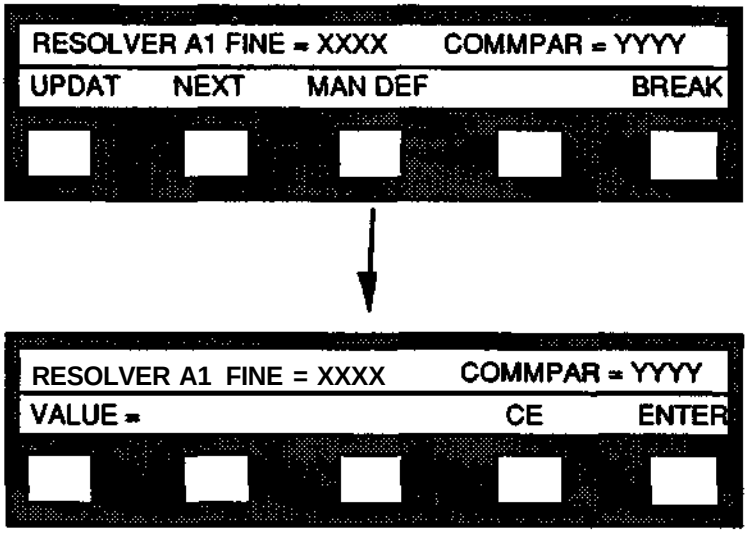

Information text upper line programming unit:

- RESOLVER Al ' Resolver feedback axis 1.
- FINE = XXXX ' Actual position of the fine resolver in resolver increments.
- COMMPAR = YYYY ' Active commutation offset in resolver increments, obtained from the parameter memory.

Sub menu for calibration offset

Sub menu to SYNCOFF.

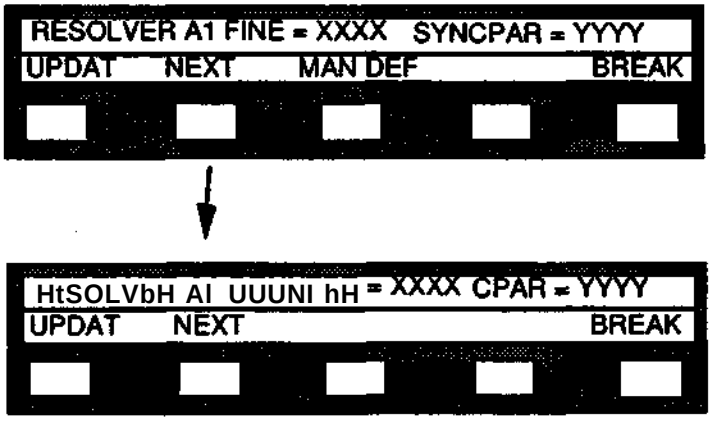

In the case when external axes are defined with absolute measurement servo system, according to the method with fine/coarse resolver, is also this alternative available

Information text upper line programming unit:
- RESOLVERA1 ' Resolver feedback axis 1.
- FINE = XXXX ' Actual position of the fine resolver in resolver increments.
- SYNCPAR = YYYY ' Active resolver offset in robot increments for fine or coarse resolver obtained from the parameter memory.
- COUNTER=XXXXX ' The actual value of the counter in whole resolver turns.
- CPAR=YYYYY ' Actual value of turn counter obtained from the parameter memory. The value of the counter in the calibration position is required for calculation of present position at power-up.

In the case with coarse resolver:
- COARSE=XXXXX ' Actual position of the coarse resolver in resolver increments.

5.3.3
Handling of calibration parameters

1. Introduction:
   The control system can be in the MOTOR ON mode. The joystick is however blocked in the menu when UPDATE can be selected to prevent motor and resolver axes changing positions in connection with this function:

2. The function UPDATE:
   - Before an axis number is selected, the associated motor and resolver axis must be in the correct position for the operation intended. In the case when only the counter is to be updated is it sufficient to position the robot according to the calibration scales on the robot. Note that all axes must be in the right position.
   - While in the menu in which UPDATE can be executed, the actual position of the resolver (FINE = XXXX or COARSE = YYYY) is presented the form of a mean value of all samples (2 times/sec). Before selecting UPDATE , it is advised to wait for approx. 1.5 s after having run the robot.
   - When UPDATE is pressed, the actual mean value of the resolver position is transferred to the parameter memory.

3. The function MAN DEF:
   a) Method A:
      - An axis selected previously can be run to the correct position after the selection of MAN DEF.
      - The actual position of the resolver (FINE = XXXX or COARSE = YYYY) is presented without the calculation of mean value.
      - After adjustment, the value presented can be read in and is then transmitted to the parameter memory.
   b) Method B:
      - Manual reading-in of commutation and resolver offset to the parameter memory with values in accordance with the robot identification documentation.
      - The value of the counter can NOT be defined manually.

4. Auxiliary function:
   - NEXT ' Selection of the next axis in consecutive order.
   - MANDEF + ENTER = without entry of data
     ' No updating of the parameter memory.
   - BREAK ' Return to proceeding menu.
   - ACTIVE ' Conclusion.

5. Conclusion:
   When the check or change is complete, the concluding action is to press ACTIVE in the proceeding menu. The changed parameters are actuated after the concluding initialization of the control system. The control system is then in the MOTOR OFF mode and unsynchronized in case that NOT all axes has absolute measurement.

5.3.4
COMMOFF, Commutation offset

Description

To obtain the maximum torque when controlling a.c. motors, the angular position of the rotor in relation to the stator must be known to the control system.

Definition

The commutation offset for an a.c. motor package is defined as the angular position in resolver increments of the fine resolver when the rotor stands in a certain position in relation to the stator. The commutation offset is defined in the position when the rotor has been rotated so that the markings on the fixed stator and the movable rotor coincide.

Parameters

System parameters for commutation offset are required for all a.c. motors i.e. for robot axes 1-6 and external axis 7 with internal drive unit for control of the a.c. motor.

Menu COMMOFF + Selection of axis.

Def. range

0-8191 resolver increments.
If a non-acceptable value is entered an error message is shown.

Default value

1 These parameters are not predefined in the PROM. When loading predefined parameters from the PROM to the parameter memory, the commutation offset for all axes 1-6 is set to undefined.
2 The default value for axis 7 is 2048(adjusted for certain factory commutated motors).
3 The values which apply for the robot installation are always specified in the robot ID-document.

It is therefore important to define the resolver parameters after loading the predefined parameters from the PROM.

Menu selection

UPDATE = The actual position of the resolver is transmitted by the control system to the parameter memory. This assumes a rotor position in accordance with the definition above.

MANDEF = Manual entry of the commutation offset to the parameter menu.

5.3.5
SYNCOFF, Synchronizing offset

Description

To obtain correct handling of TCP and thereby straight lines, the position of the resolvers in relation to the mechanical must be known to the control system.

Definition

The synchronization offset for an installed motor package is defined as the angular position, in resolver increments, of the fine and coarse resolvers, when the robot axes and external axes are in the synchronization position (calibration position in systems with absolute measurement). When in this position, the synchronization offset can be read on the programming unitThe value of the fine resolver together with a counter (or coarse resolver) gives the possibility to calculate a absolute position without synchronizing the robot

Parameters

System parameters for synchronization offset are required for all axes installed.

Menu SYNCOFF + Selection of axis.

Def. range 0-8191 resolver increments. (Fine- and coarse resolver)
0, -1, +1 turns (the counter of the fine resolver in calibration position)

Default value

Not predefined in the PROM. When loading predefined parameters from the PROM to the parameter memory, the resolver offset for all axes is set to 0 and the counter to "undefined". The synchronizing parameters must therefore be entered after such an operation.
The values which apply for the robot installation are always specified in the robot ID-document except for the counter that always is updated manually.

Menu selection

UPDATE = The actual position of the resolver is transmitted by the control system to the parameter memory. This assumes a rotor position in accordance with the definition above.
MANDEF = Manual entry of the resolver value to the parameter memory.

5.3.6
COUNT

Description

Using this key, all revolution counters are set to zero due to an internal calculation of compesnation.

Resulting question

UPDATE ALL COUNTERS?
YES or NO

5.4
Test running (MANUAL mode)

See the Product manual chapter Safety and the Programming Manual for detailed information about operation and programming.

1. After checking the system parameters the robot can be started.
   From MOTOR OFF, as described in chapter 4.3 the robot system is switched to MOTOR ON by pressing the enabeling device.

2. Robot system with absolute measurement has a well known absolute position if the robot system is calibrated and is therefore directly ready for operation.

   Calibration is described in the service manual.

   If the system have external axes that has to be synchronized (wellknown home position) before the system is ready for operation the MOTOR ON -lamp will start to flash. The external axes are synchronized by pressing the SYNC button on the programming unit.

3. The robot is ready for operation when the MOTOR ON - lamp stops flashing and the text READY is presented on the display.

Before pressing the synchronization button make sure that external axes are free to move into the synchronizing position (home position).

Test running should be performed in a series of steps. Begin by running the robot manually through its complete working range.A simple positioning program can then be test-run, instruction by instruction to begin with, and then in an automatic sequence at different speeds.

The peripheral equipment can be tested either by programming and executing instructions which activate the peripheral equipment or by simulating the corresponding signals in the peripheral equipment.
Perform a systematic check that all functions in the peripheral equipment are executed as intended. A test-run of a program combining robot and peripheral equipment operations should then be performed.

The test-run is to be concluded with checks of the functions of any sensor in the system and the transmission of data over any computer link.

Check the storage of program material on diskette and its return to the robot memory.

5.5
Parameter errors

The error conditions associated with the parameter memory check are described below:

Condition 1.
The system does not start because of errors in the parameters currently stored in the parameter memory. The following series of actions is then necessary:

* The programming unit shows first a menu of the languages available in the system. Select the language required.

* The programming unit then shows a menu for selection of which system parameters are to be used.

The following alternatives are available:

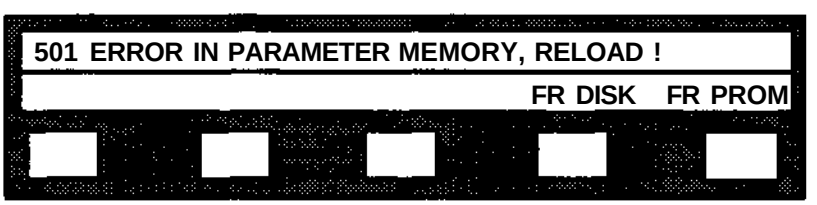

a. Loading of predefined parameters from the PROM:
- Press FR PROM. Note that not all the system parameters are predefined. That means that when reloading, the resolver and commutations offsets will be reset.

b. Loading of stored parameters from diskette:
- Insert a diskette containing valid system parameters in the disk drive.
- Press FR DISK.

Check that the disk have the right resolver data, belonging to the actual robot. If data from an other system is loaded, the robot can move in a unexpected way. Always check the calibration position of the robot with the system disk (see chapter 8.3 Test program) before the robot is taken in production again.

* The system loads the parameter memory in accordance with the selection made.

- The system restarts.

Condition 2.
The system does not start because of incorrect definition of one or more individual system parameters or because the control system is not provided with the equipment defined by the system parameters.

- The programming unit first presents one or more error messages on the upper line and a menu for selection of changes of the parameter memory on the lower line.

- First correct any incorrect equipment settings.

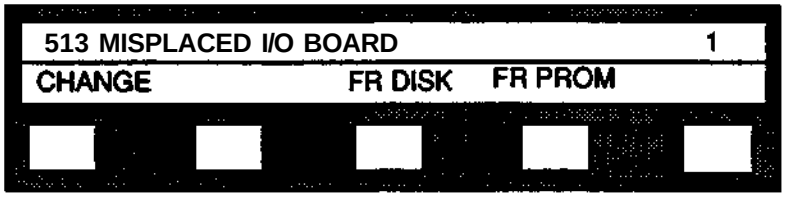

- Then select a suitable alternative to correct any incorrectly defined system parameters:

  a. Individual system parameters can be corrected with CHANGE. See further section 5.2. Select ACTIVE in the succeeding menu to start up the system after the incorrect equipment setting have been corrected.

  b. Function button FR PROM as for condition a above.

  c. Function button FR DISK as for condition b above.

  - The system starts up.

5.6
Index

6 EXTERNAL AXES

6.1 External axes and axis 7

The system is capable of positioning up to six speed-controlled servo-motors with the drives located outside the control systemt, so called external axes. An external axis may be, for instance, a travel motion for the robot, or a turntable. The drives may be of a AC or DC type.

Axis 7 may be defined as either an internal or as an external axis.
The following table shows the difference between an internal and an external 7th axis:

	internal axis 7		external axis 7	
Max. no. of external axes	4 * 0	IRB 2000,3000 IRB 6000	6 1	IRB 2000, 3000 IRB 6000
Drive unit	AC drive in control cabinet		External drive unit with speed reference from control system	
Motor	4- or 6-pole synchronous motor, of IRB-type.		DC or AC, depending on drive unit	
Connection for monitoring motor temperature	Yes		No	

* If an internal axis 7 is installed, 3 further axes can be controlled by the robot.

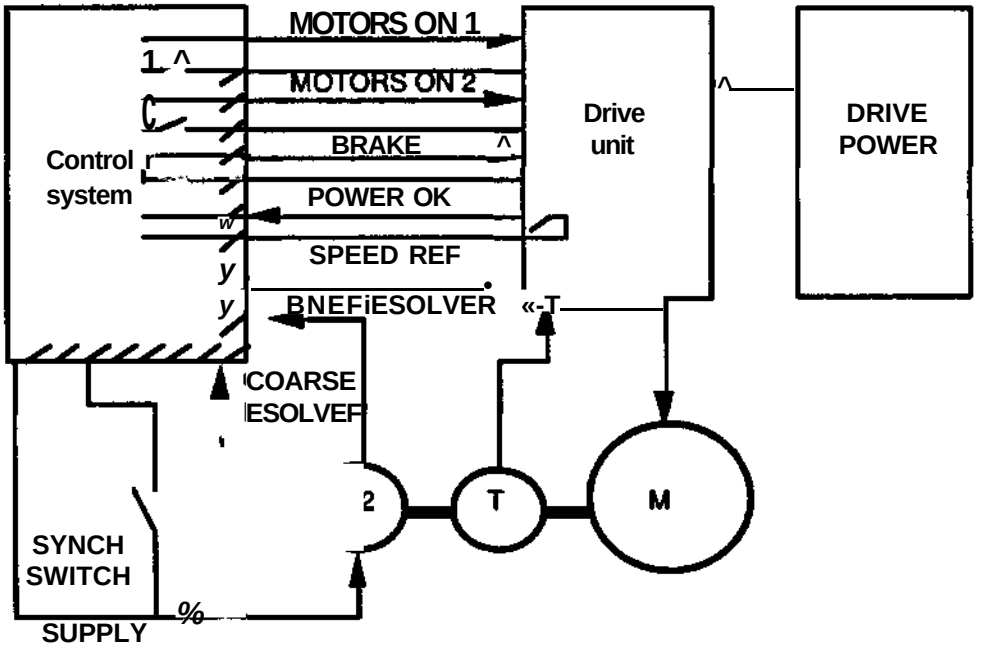

6.2
Required equipment

The following equipment is required to control external axes:
External axes board, DSQC 233, must be fitted in the control system (not needed if internal drive unit is used). This board contains hardware for the signal interface to all 6 external axes. External axes are connected to XS4, XS3 and XS7.

- **For external axes 7 -12:**
  Drive units for all axes. The external drive unit should have the same performance data as the robot, i.e:
  - Power failure, one period without operational disturbance
  - Power variations, -15% - +12% of rated voltage
  - Frequence variations. -2% - +2% of supply frequency

- Common logic for all axes (not applicable to internal axis 7). The logic must process control signals from the robot for:
  - MOTOR ON/MOTOR OFF
  - applying brakes

- **For internal drive unit**
  A 4- or 6-pole AC synchronous motor, type **IRB.**

- **For systems without absolute measurement**
  - One resolver per axis for position control
  - One sync, switch per axis for definition of sync, position.

- **For systems with absolute measurement**
  - Two resolvers per axis, for position control and absolute measurement.
  - One resolver and serial measurement board with battery for internal drive unit.

- **Supply voltage for control signals and sync, switches:**
  - +24 V I/O from the control cabinet See section 3.6.1 "24 V I/O" for technical data.
  - External +24 V supply. See section 3.6.2 "External power supply" for technical data.

- Cabling fulfilling signal class "Measurement signals" see section 3.1 "Signal classes".

- Apparatus cabinet for the above equipment, should fulfil enclosure class IP 54 according to IEC 144 and IEC 529.

6.2.1
Technical data

Resolvers of transmitter type, external drive units

Electrical data

Primary	Rotor
Frequency	2 kHz
Rated voltage	5.6 Vrms
Impedance	>150 ohm
Supply capacity	0.5 A rms (12 resolvers)

Secondary	Stator
Transmission ratio	0.5 ±10%
Impedancex	<200 ohm
Fine resolver ratio	1:1
Coarse resolver ratio	136:137

Sync switches, limit switches

Max. voltage	35VDC
Load	min 10 mA

Motor, Internal axis 7

Technical data	ABB Production Development have further information.

Resolver for serial measurement board

Electrical data

Primary	Rotor
Frequency	3-4 kHz
Rated voltage	5 Vrms
Impedance	>350 ohm

Secondary	Stator
Transmission ratio	0.5 ±10%
Impedancex	<400 ohm
Phase shift	-5° ±3°

Status signals from the control system
(**EXT MOTOR ON 1, 2,** EXT **BRAKE)**

Max. supply voltage	48VDC
Max. current continuously	1A
Max. potential in relation to ground	400 V
Signal class according to section 3.1	control signals

6.3
Signal description

6.3.1
Common signals

The following signals are for the external axes 7 -12:

LIM SW **EXT(l-7)**
The signal is common to all limit-position switches throughout the system. All limit-switches are connected in series. An open circuit indicates that the external axis has reached the limit of its working range, and this will tripthe safety chains in the robot. The signal must be jumpered if not used. When the MOTOR ON-button in the control system is kept depressed, the axis can be jogged past the limit-position switches back into working range.

Note: The dual safety chains requries on intermediate relay if a single limit switch is used.

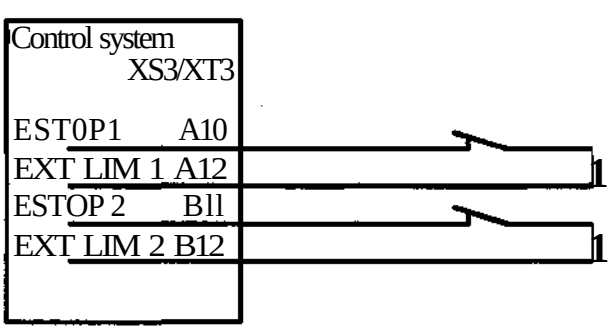

POWER OK

Information to the control system from the common logic for external axes. If this signal is not used for external axes, it must be jumpered.

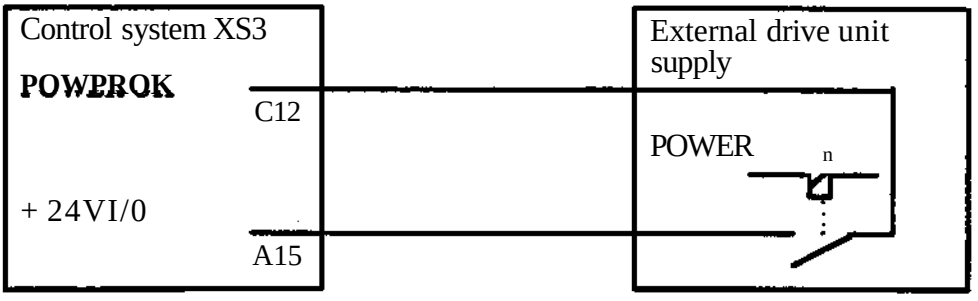

PTCM7.0VPTCM7

Temperature monitoring of a motor. The motor's PTC-resistor is connected in a closed loop. Open loop indicates that the motor temperature is too high. If a temperature monitor is not used, the circuit must be jumpered.

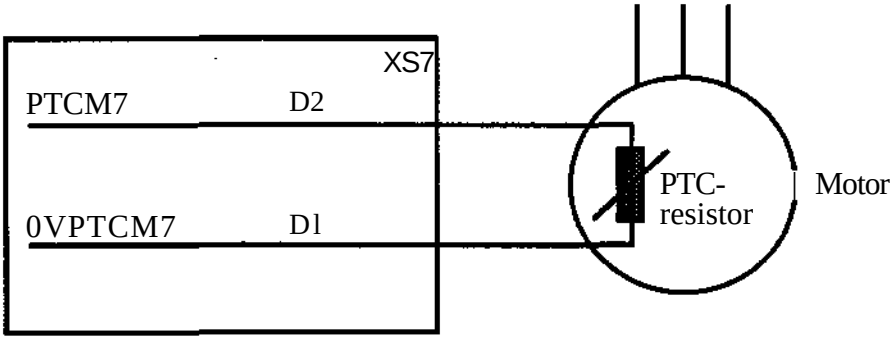

Power supply
+24VI/O,0V

An internal 24 V voltage from the control cabinet Provided the permissible load is not exceeded, the voltage can be used for the following:

- Supply of sync, switches and associated control function (external axes **without** absolute measurement).

- Supply of external brakes.
  X FINE (7-12), Y FINE (7-12), X COARSE (7-12), Y COARSE (7-12), O V
  The X FINE, Y FINE and 0 V signals are used for connecting fine resolvers to the control system.

The X COARSE, Y COARSE and 0 V signals are used for connecting coarse resolvers **when the external axes are provided with absolute measurement.**

X COARSE can also be used to connect sync, switches supplied by the EXC, (see below), if the level of disturbance is moderate. However, in environments with a high level of disturbance, separate SYNC-inputs are recommended (see below), supplied by +24 VDC.

SYNC (7-12)

Digital +24 V input from sync switches, external axes. The input can be supplied with +24 V I/O or an external +24 V voltage.

EXC, OVEXC

Common supply of all resolvers.

Connection in with low noise level environment

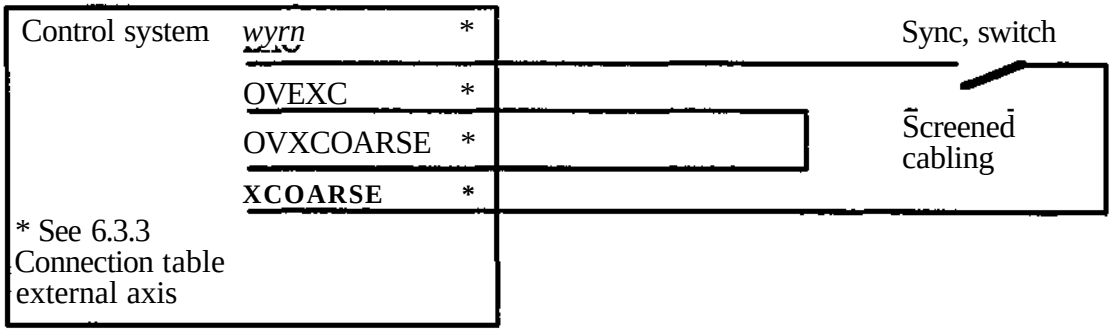

Connection in noisey environment, internal 24V supply

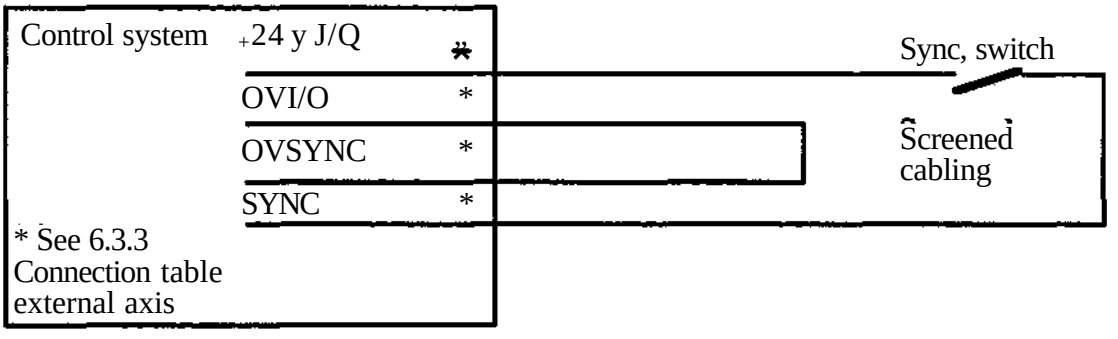

Connection in noisey environment, external 24V supply

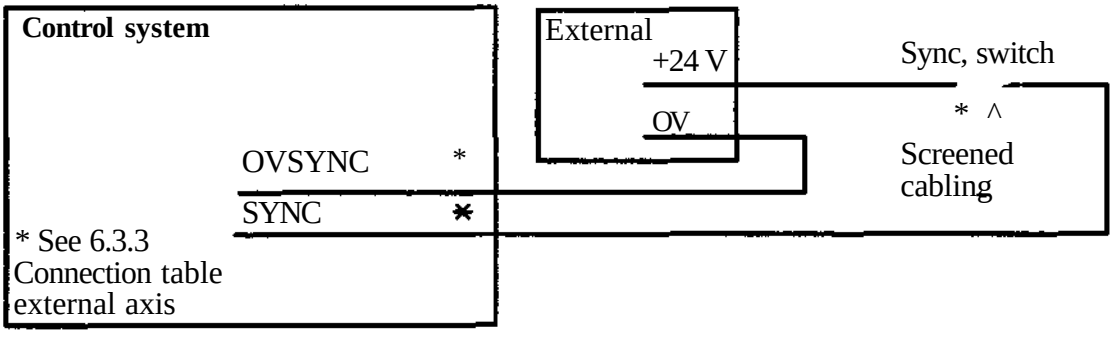

Connection of resolvers

EXC supplies the rotors of all fine resolvers in parallel via contact XS4.

The rotor of the coarse resolvers is connected in corresponding manner, when the external axes are provided with absolute measurement.

Each resolver contains two stators and one rotor, connected as shown in the figure below:

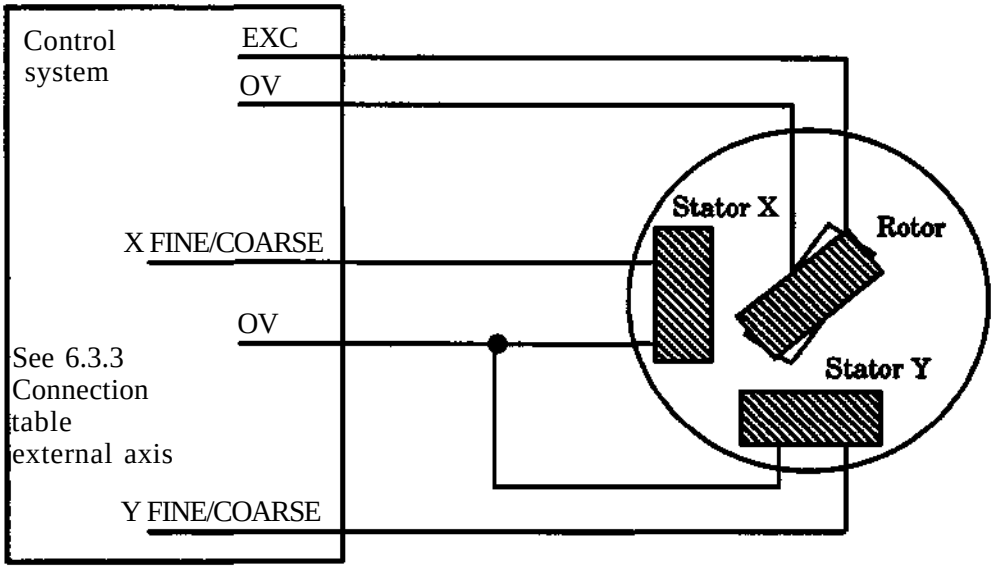

6.3.2
Internal axis 7

Internal axis 7 is connected according to below:

M17,M27,M37
Motor current R-phase, (U-phase), S-phase (V-phase) and T-phase (W-phase) respectively.

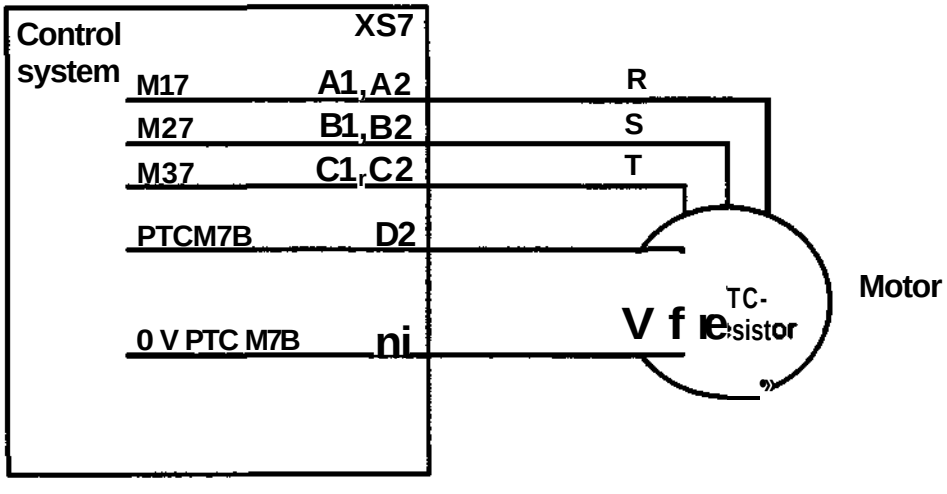

Connection table, internal axis 7

User contact XS7

LIM1M7	**A4**	**A4-A5, B4-B5 jumpered**
LIMIT1	**A5**	**if not used**
LIM2M7	**B4**	
LIMIT 2	**B5**	
PTCM7B	**D2**	**D2-D1 jumpered**
0VPTCM7	**D1**	if not used
24VI/O	**A10**	
OV	**BIO**	
BRAKE RESLEASE M7	**A9**	
M17	**A1.A2**	
M27	**B1,B2**	
M37	**C1.C2**	

6.3.3 External axes 7-12

As well as the signals described in section 6.3.1, the following control signals shall be connected between control systemt and external drive units:

EXT MON 1A-1B **and** 2A -2B
Orders MOTOR ON/MOTOR OFF status in the control system to the common logic for external axes. Closed loop indicates that the control system is in MOTOR ON mode (voltage to motors). Open loop indicates MOTOR OFF mode (no motor voltage).

EXT BRAKE ON
Orders BRAKE ON/BRAKE OFF from control system. Closed loop indicates that the robot brakes are not engaged, i.e. the motors retain the robot arms in position.

Incorrect definition of the system parameters with respect to brakes or external axes may result in hazardous conditions.

Internal +24V suppl

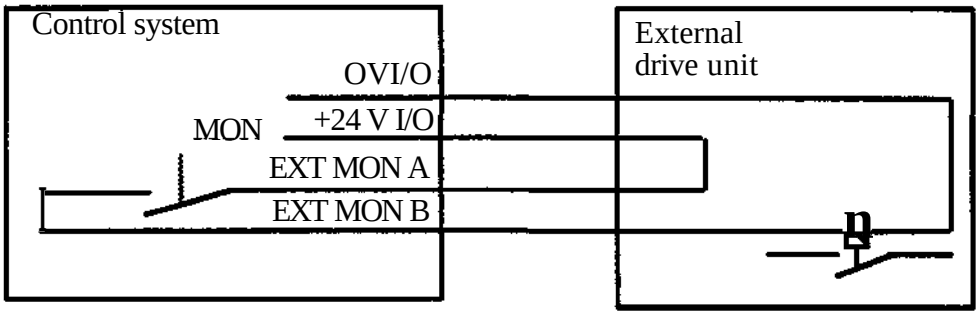

External +24V supp

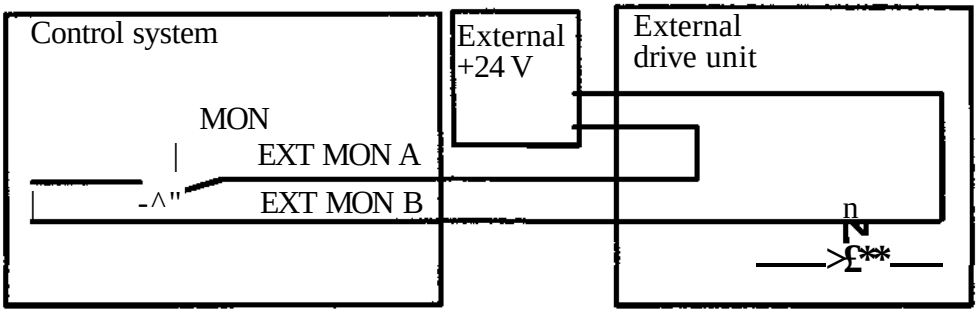

Note:
From the safety aspect it is important that the external motor is without power when the robot is in MOTOR OFF mode.

The signal EXT BRAKE ON should be used to block the speed controller of the external axis (BLOCK signal), so that any offset does not integrate up to the current limit when the brakes are activated.

To prevent an external axis equipped with brake from moving when the brake is operated (applicable to axes affected by gravitation), an extra time-delay may be created between EXT BRAKE ON and BLOCK as follows.

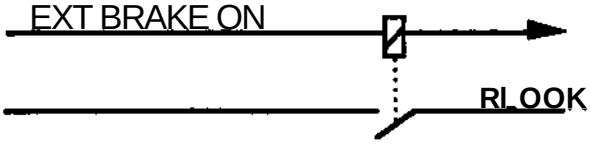

VREF (7-12), 0 V VREF (7-12)
Analog reference signal,-10 - +10 V, for the speed reference from control system to the external drive unit System parameters define which max. voltage in the range -9.4 - +9.4 V corresponds to the defined max. speed in the range -3000 - +3000 rpm. See section 5.2.4.13 relating to system parameters for the speed reference to an external drive unit.

Connection table, external axis

User contact XS3

ESTOP 1	A11	
EXTLIM1	A12	
ESTOP 2	B11	A11-B12 and B11-B12 jumpered if not used C12-A15 jumpered if not used.
EXTLJM2	B12	
24 V I/O	A15	
POWER OK	C12	
24 V I/O	A16	
OV	D16	
EXTM0N1A	A13	
EXTMON1B	A14	
EXTMON2A	B13	
EXTMON2B	B14	
EXT BRAKE A	CIO	
EXT BRAKE B	C11	

Connection table, external axis 7
User contact XS4

EXC	C6
OVEXC	D6
XFINE	C8
YFINE	D8
OVFINE	B9
OVREF	B3
VREF	A3
SYNC	Al
OVSYNC	C2
X COARSE	A8
Y COARSE	B8
OV (COARSE)	A9

Connection table, external axis 8
User contact A26.X2.1 eiler B1.X5.1

EXC	C6
OVEXC	D6
XFINE	CIO
YFINE	D10
OVFINE	D9
OVREF	D3
VREF	C3
SYNC	Bl
OVSYNC	C2
XCOARSE	A1O
YCOARSE	BIO
OV COARSE	C9

Connection table, external axis 9

EXC	C6
OVEXC	D6
XFINE	C11
YFINE	D11
OVFINE	B12
OVEEF	64
VREF	A4
SYNC	C1
OVSYNC	C2
XCOAKSE	A11
YCOARSE	B11
OVC	A12

Connection table, external axis 10

EXC	C7
OVEXC	D7
XFINE	C13
YFINE	D13
OVF	D12
OVREF	D4
VREF	C4
SYNC	D1
OVSYNC	C2
XCOARSE	A13
YCOARSE	B13
OV COARSE	C12

Connection table, external axis 11

EXC	C17
OVEXC	D7
XFINE	C14
YFINE	D14
OVFINE	B15
OVREF	B5
VREF	A5
SYNC	A2
OVSYNC	C2
X COARSE	A14
Y COARSE	B14
OV COARSE	A15

Connection table, external axis 12

EXC	C7
OV	D7
XFINE	C16
YFINE	D16
OVFINE	D15
OVREF	D5
VREF	C5
SYNC	B2
OVSYNC	C2
XCOARSE	A16
YCOARSE	B16
OV COARSE	C15

6.4
Switching up and starting (MANUAL mode)

Once installation of the drive unit, control signals, motors and resolvers is completed, the external axes can be started up. The start up procedure for internal axis 7 differs from that of the external axes 7-12.

6.4.1
Internal axis 7

If internal axis 7 is the Servo-Driven Track Motion, see Installation Manual for resp. Track Motion-type for system parameters. For different type of motor follow the instuction that belongs to the motor in question.

1. Connect motor and external equipment as explained in the previous section.

2. Enter following system parameters (for detailed information, see section 5.2.4.13)

   - Select axis 7
   - Definition of axis 7
   - Limiting work range
   - Preliminary position gain, Kp=^
   - Max. motor speed
   - Control from internal drive
   - Preliminary start-parameters for speed reg.:
     P = approx. 5
     I = approx. 2.5 sec

3. With the robot in MOTOR OFF mode, adjust the predefined reference position for the AC commutation by turning the shaft by hand until the markings on the rotor (or brake if there is one) and the motor shaft coincide. Bead, note and update the resolver position = preliminary commutating offset (see section 5.3.4).For certain types of motors, with built-in resolver, the commutation offset is predefined to the value 2048.1 these cases there is no need of changing the commutation offset.

Check that right commutation offset is defined. Wrong value can result in an uncontrolled motion. No warning is given if the predefined value is wrong.

4. Turn the motor shaft **extremely slowly** in the positive direction (clockwise as seen from the front) and check with the SYNCOFF function on the programming unit that the resolver value is increasing. At a value of 8192, the value changes to 0, and then increases again (see section 5.3.2).
   If the value decreases, change polarity on the stator winding of the fine resolver (signals Y FINE and X FINE) and repeat from point 3 above.

5. Update the synchronization offset and the turn counter in the calibration position.

6. Press the enabeling device to get MOTOR ON mode. If the axis races, or remains stationary at attempts to move with joystick, check the phase sequence to the motors and the commutation position (paragraph 5 above).

7. Go to the MOTOR OFF mode (release the enabeling device).

8. Trim the internal axis as directed in section 6.5.

9. Enter the trimmed value on position gain, KL_p as a system parameter.

10. Test-run the robot and the external axis.

6.4.2
External axes 7-12

1. Connect the external drive unit to the motor and external equipment as explained in the previous section.

2. Enter the correct values for the following system parameters (see section 5.2.4.13):
   - Definition of axes connected
   - Limiting work range
   - Preliminary position gain, K_p=5
   - Max. motor speed
   - **For axis 7, select EXTERNAL**
   - Max. output voltage for ref. speed

3. With the system in MOTOR OFF mode, turn the motor shaft extremely slowly in the positive direction (clockwise as seen from the motor drive shaft) and check with the SYNCOFF function on the programming unit (see section 5.3.2) that the resolver value is increasing.
   At a value of 8.192, the value changes to 0, and then increases again.

   If the value decreases, change polarity on one stator winding of the fine resolver (signals Y FINE and X FINE) and repeat.

4. Press the enabeling device to get MOTOR ON mode. If any of the external axes races, or if a servo-lag fault is obtained on the programming unit, the following faults may have occurred:
   - Wrong polarity on tachometer feedback connection
   - Wrong polarity on speed reference
   - Point 3 above has been incorrectly executed

5. Go to the MOTOR OFF mode (release the enabeling device).

6. Trim the external axis as directed in section 6.5.

7. Enter the value of position gain, KL_p as a system parameter.

8. Adjust the synchronizing position in accordance with section **6.6** "Adjusting synchronizing switches and absolute measurement transducers".

9. Synchronize and test-run the robot and the external axes.

Warning!
Both commutation offset and synchronization offset are stored as system parameters. The system parameters are thus dependent on the robot, which may entail certain restrictions if system parameters are taken from PROM, floppy disk or superior computer, see section 5.1.

6.5
Servo-trimming of axes 7-12

6.5.1
Preparation

Equipment required:
- Two channel printer (chart recorder) 25-125 mm/s, e.g. Brush 220
- Cables

Settings required in the control system:
- Speed controller parameters for internal axis 7
- Position-controller parameters for axes 7-12

Settings required in externall driv systemet:
- Speed-controller parameters
- Current limit
- Overload protection

For setting and trimming of external driv systemet, please refer to the relevant documentation. When trimming the external, driv systemet, the control system can generate speed reference. A description of this, together with some general hints for trimming the speed regulator are given in section 6.5.2.
Connect and start the external axes as described in section 6.4.2.
Start by trimming the speed controller and then continue with the position controller. All axis speed supervision functions are not active during trimming.

6.5.2
Speed controller, internal axis 7

1. If the axis has variable moment of inertia.the gain should be trimmed with the smallest possible moment of inertia. The integral part of the gain should be trimmed with the maximum possible moment of inertia.

2. Connect the printer channels to the test outputs on the robot computer. (Marked 1 and 2 with common zero point ground. Voltage level ±10 V).

3. TSIG. Activate test signals via the P-unit using function TSIG (see section 6.5.4.1):
   - CHANNEL 0 (output 1) = TEST SIGNAL 17 (speed, high) or 18 (speed low).
   - CHANNEL 1 = TEST SIGNAL 16 (torque reference)

4. TRIM. TUNE. The TUNE function is not yet available. The tuning parameters are entered as system parameters.
   External axes are servo-trimmed according to the suppliers instructions. Offset error should be eliminated. That is to say, when supplied with zero reference, the axis should be at stand still. The following example is valid for an internal axis 7.
   - P = approx. 5 times
   - I = 2.5 s

5. TRIM, MOVE. (The robot first has to be synchronized) Define a back and forth trimming movement using the MOVE function (see section 6.5.4.2):
   - TYPEOFMOVE = 3
   - VELOCITY = approx. *5%*, the speed must be low enough to guarantee not encountering the current limit but high enough to prevent the friction from affecting result.
   - DISTANCE = 1 revolution of the resolver, the distance should be selected to ensure that max. speed is reached before declaration starts.
   - WATTING TIME = 1 s, the time chosen should be sufficient to allow the axis to stop before turning.

6. TRIM, START. Start the defined movement by pressing the START button (see section 6.5.4.2).

7. TRIM, TUNE. Satisfactory trimming is obtained by repeating steps 4, 5 and 6. Adjust the system parameters in the following manner:
   - Increase the gain (P) until overshoot is just reached.
   - Adjust the integration (I). Gradually decrease until the overshoot is approx. 5-10%. No more than 1-2 oscillations should be accepted.

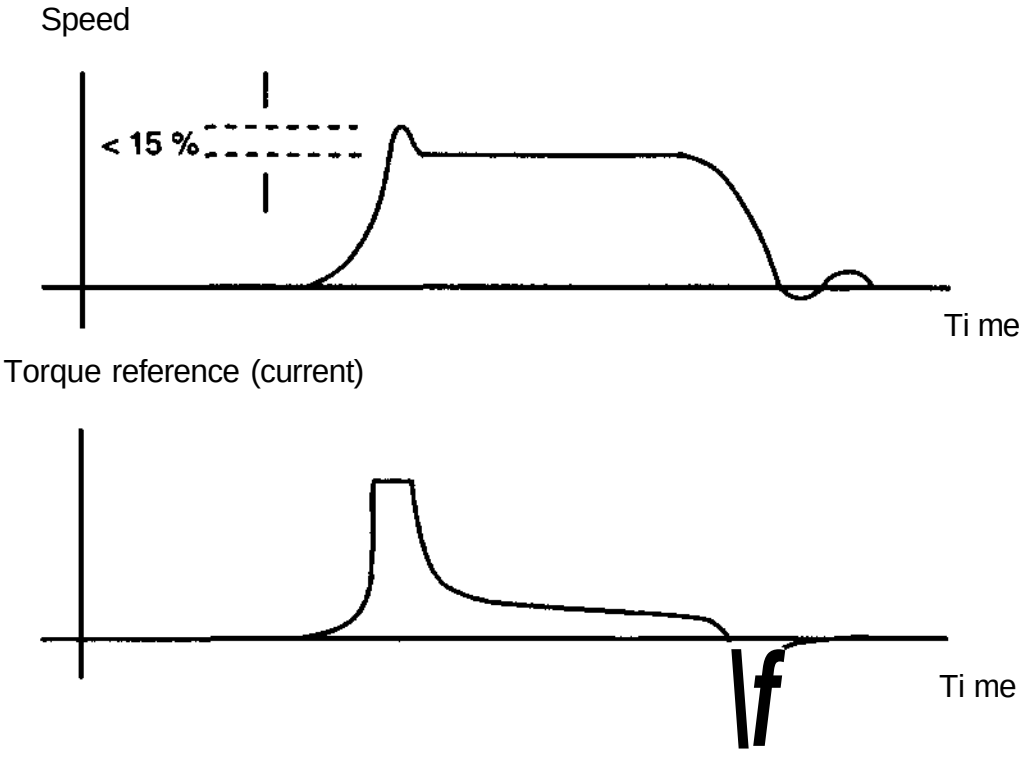

Fig. Ideal step control response, speed control

6.5.3
Position control

1. If the axis has variable moment of inertia, the gain should be trimmed with maximum moment of inertia.

2. Connect one channel of the printer (chart recorder) to test output on the robot computer (test output 2 with common zero point ground. Voltage level ±10 V.) Connect the other channel of the printer to the tachometer signal of the axis being dealt with.

3. TSIG. Activate test signals via the P-unit using function TSIG (see section 6.5.4.1).
   - CHANNEL 1 = TEST SIGNAL 16 (torque reference)

4. TRIM, TUNE. Set suitable start values for the position gain. Kp, using system parameters:
   - A7-A12 = approx. 5 (s-1)

5. TRIM, MOVE. Define a position controlled back and forth movement:
   - TYPEOFMOVE = 4
   - VELOCITY = 100%
   - DISTANCE =approx. 10 revolutions of the resolver, the distance should be selected to ensure that max. speed is reached before declaration starts.
   - WATTING TIME = 2 s, the time chosen should be sufficient to allow the axis to stop before turning.

6. TRIM, START. Start the defined movement by pressing the START button.

7. TRIM, TUNE. Adjust the gain in the following manner:
   - Increase the gain EL_p using system parameters steps of 0.5 until the quickest deceleration is obtained without overshoot.

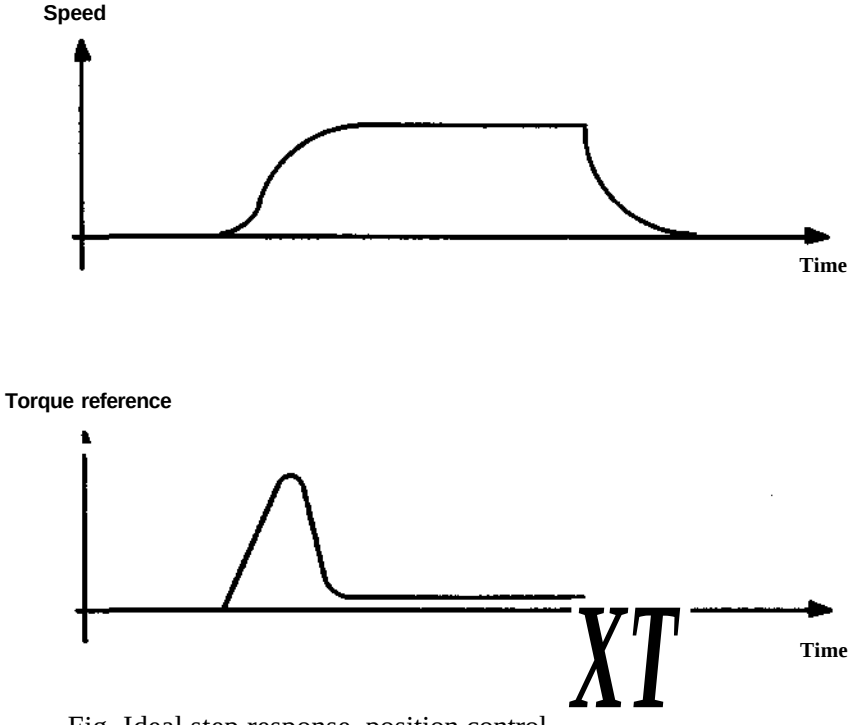

Fig. Ideal step response, position control

6.5.4 Handling of the P-unit

6.5.4.1 Test signal configuration

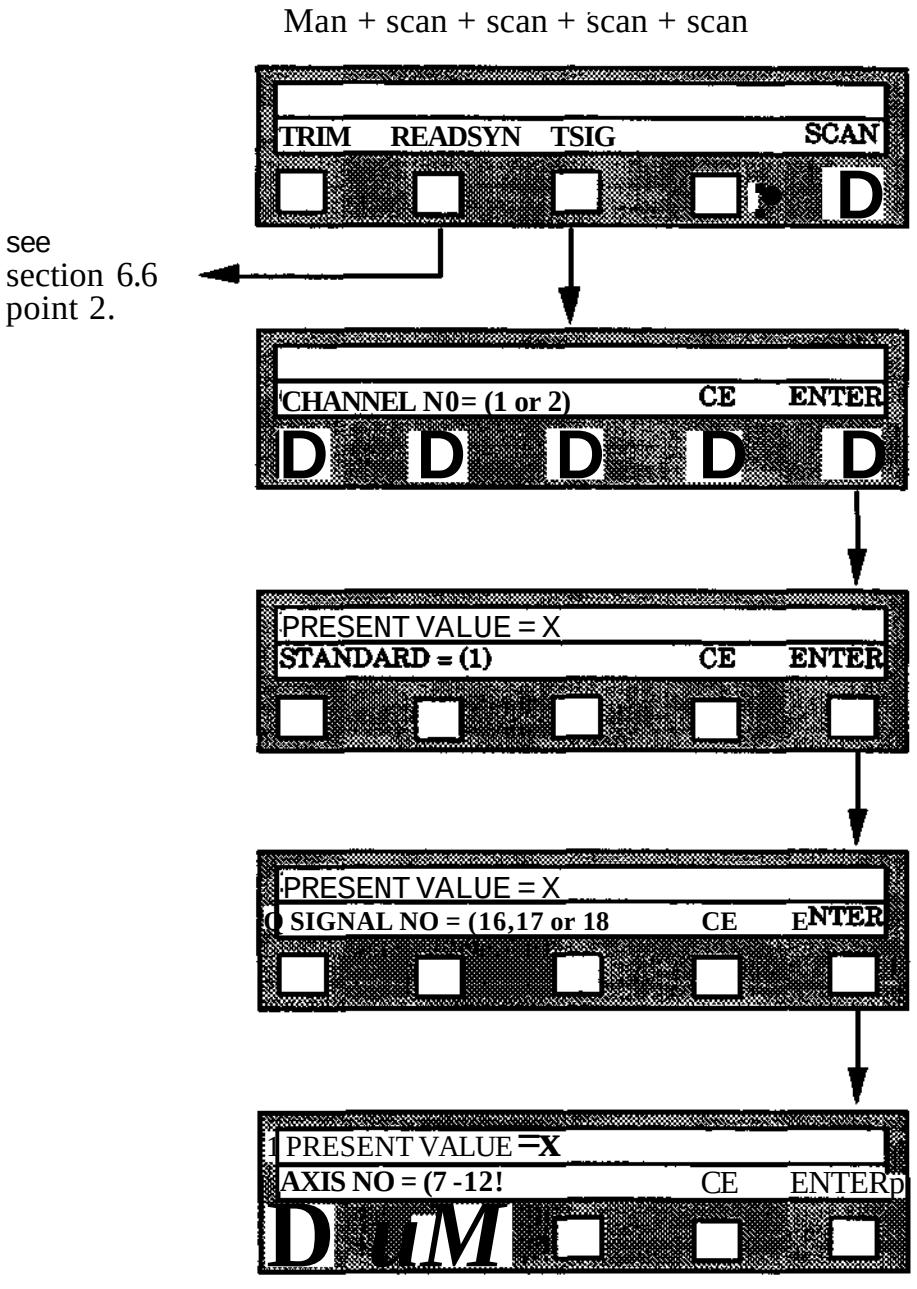

Axis	Torque reference Test signal 16			Kt	Speed	
	AN	*AeWV*	Nm/V	(Nm/Aeff)	Test signal 17 rpm/V	Test signal 18 rpm/V
Internal axis " IRB2000/ 3000 Track motion	1,32	0,93	1,82	1,95	222	13,8
Internal axis 7 IRB6000 Track motion	5,2	3,68	3,05	0,83	522	32,6

Fig. The scale of testsignals

6.5.4.2
Trimming function

The TRIM function can only be activated in MANUAL mode. This results in that the enabeling device must be activated during the whole TRIM procedure. If the enabeling device is released during the trimming procedure or if program running is intended to be carried out, the system has to be initialized again. If the system is provided with external axes, with relative measurement, the system has to be resynchronized before program running.

MAN + SCAN + SCAN + SCAN + SCAN

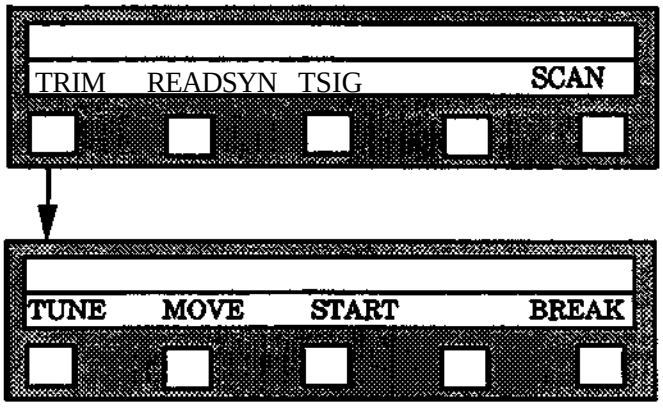

TUNE is used when new control parameters are to be entered, (see below) START is used to start the trimming movement MOVE is used to define the trimming movement, (see below)

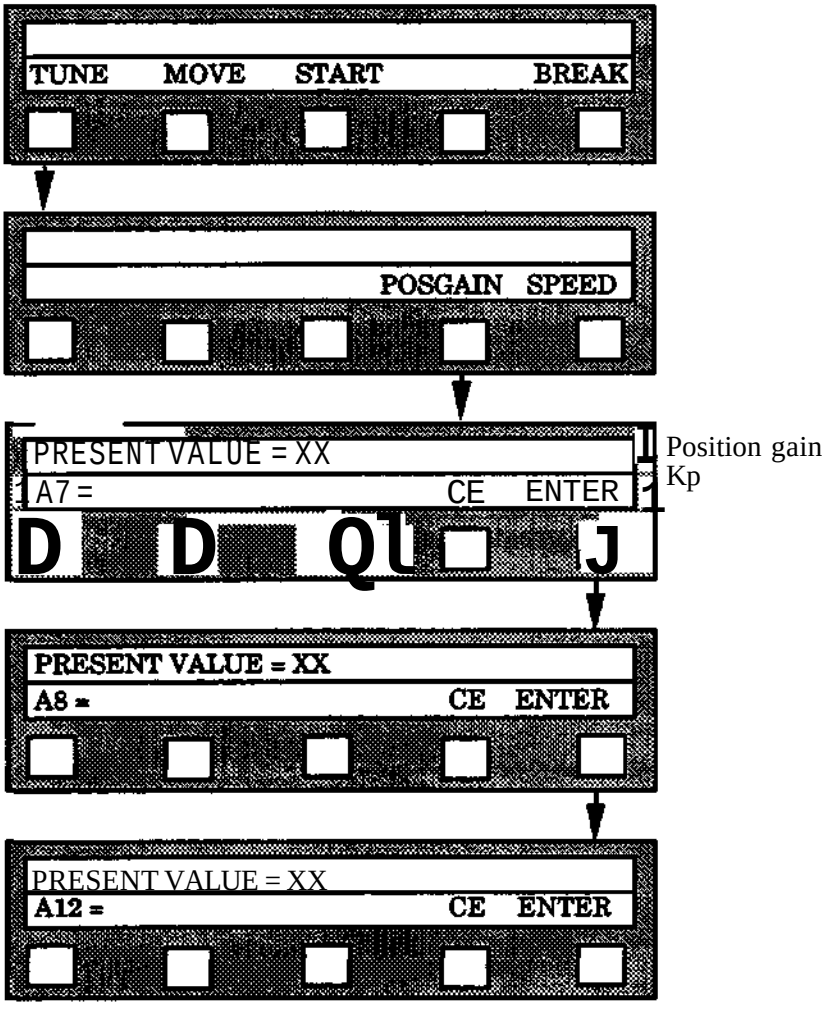

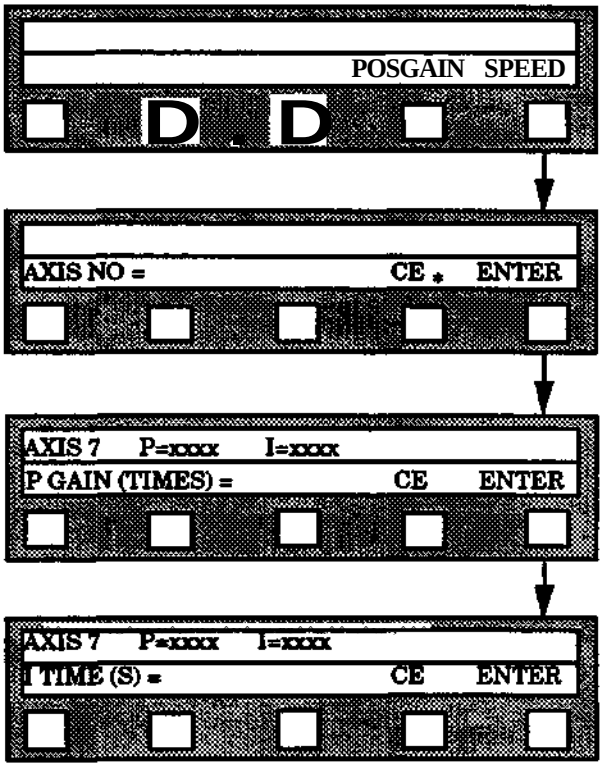

If axis 7 is an external axis an error printout will be given, and a return to the above hierarchy will result

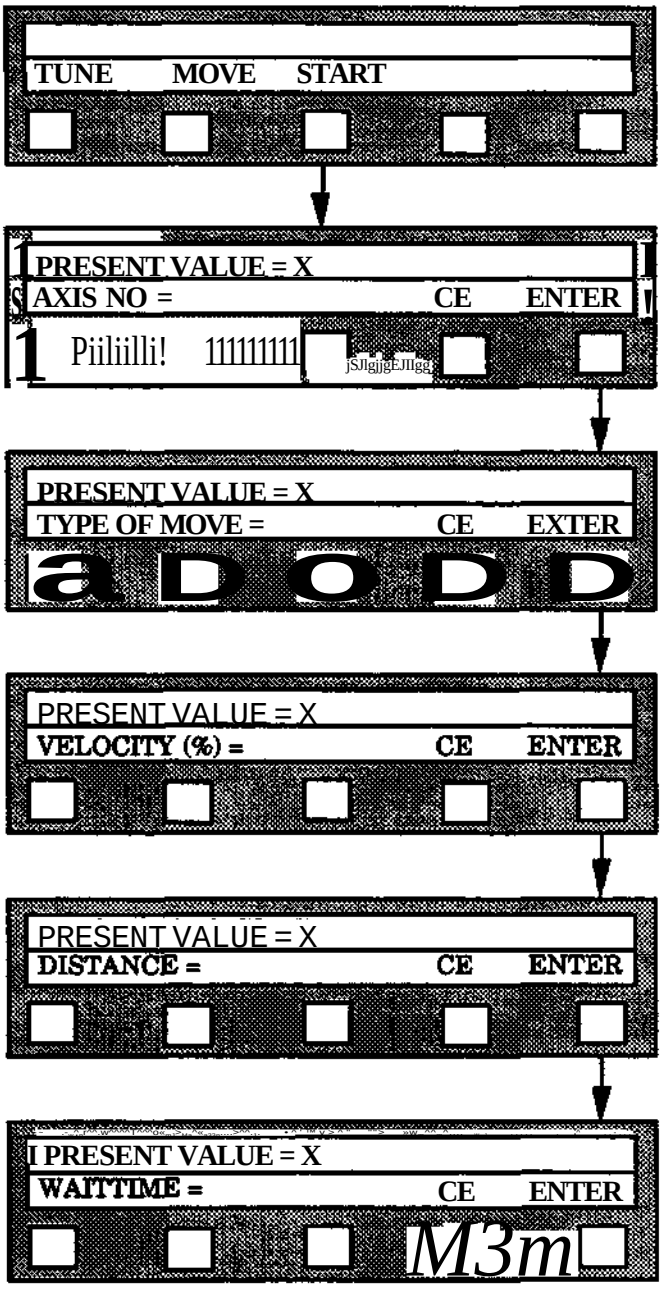

Type 1 = axis movement in positive direction
Type 2 = axis movement in negative direction
Type 3 = 5 speed regulated cycles: positive movement wait - negative movement - wait etc
Type 4 = 5 position regulated cycles: positive movement - wait - negative movement - wait etc.

6.6

Adjusting synchronizing switches and absolute measurement transducers

Adjusting synchronization switches

1. Run the motor to the synchronizing position.
2. When the axis moves towards the synchronizing position, the synch, switch must be adjusted so that it closes when the motor is turned in the positive direction (clockwise as seen from the motor drive shaft). Adjust the synchronizing switch so that switching occurs within ±2048 resolver increments from the synchronizing position. The switching can be seen on the programming unit, using the function READYSYN, see section 6.5.4.1.

3. Enter MOTOR OFF mode.

4. Read the resolver position while in the synchronizing position. Note it down and update the resolver offset (see section 5.3.5). The resolver reading in the synchronizing position is the correct value for the synchronizing offset.

5. Repeat the above procedure for all external axes.

6. Start the system, synchronize and check synchronization positions.

Adjusting absolute measurement

1. Define the external axes as absolute measurement system.

2. Run the axis to the calibration position.

3. Enter MOTOR OFF mode.

   Since the system has been defined as an absolute measurement system, the coarse resolver will be written out on the programming unit after the fine resolver value. Both values should be read, noted and updated simultaneously.

4. Follow the procedure "Adjusting synchronizing switches" above, starting at paragraph 4.

7

Quick start-up and Parameter index

This chapter contains start-up procedures from previous chapters:

7.1
Check list before startup

Before switching on the power, check as follows:

1. The mains supply fused rating.

2. The supply transformer in the cabinet is connected for the correct voltage.

3. The unused circuits in the safetychains must be closed by connecting jumpering:

Auto Stop:	XS3 or XT3	A3-A4andB3-B4
Manual Stop:	XS3 or XT3	Al - A2 and Bl - B2
General Stop:	XS3 or XT3	A5 - A6 and B5 - B6
Customer emergency stop	XS3 or XT3	A7 - A8 and B7 - B8, A9 - A10 and B9-B10
MOTOR OFF clamping device	XS3 or XT3	Cl - C2 and Dl - D2
External axes limit switches:	XS3 or XT3	All-A12andBll-Bl2
Ext.drive units POWER OK*	XS3 or XT3	C12 - C16

4. If the controller includes the external axes option, check that the external axes connections are made, or the following circuits are jumpered:

Motor PTC, axis 7:	XS7	D1-D2
7th(-12th) axes limit switches:	XS7	A4 - A5 and B4 - B5

5. The programming unit is connected.

6. The operation modeselector on the operating panel is set to MANUAL <250 nun/8.

7.2

Startup to standby

1. Make sure the cabinet door is closed

2. Switch the power on.

3. The MOTOR OFF lamp on the control panel illuminates when the system has completed the hardware and software diagnostic test. This test lasts about 30 seconds.

The following may occur after the start up routine is completed:

A. Normal start with presentation of the message " **ABB** ROBOT SYSTEM AT YOUR SERVICE".

B. Presentation of a fault message.

If the MOTOR OFF- lamp flashes, read the error message on the programming unit display. Actions to be taken to correct different errors are described in separate sections in the Programming Manual or the Service Manual. Correct the cause of the fault message and continue the start procedure as in case 1 above.

C. System parameters absent

See the chapter "System parameters".

Normally the robot starts up with the system parameters stored from the manufacturing. If that's not the case and a the fault message "501 FAULT IN THE PARAMETER MEMORY, RELOAD!" is displayed must the system parameters must from DISC be entered, ace. to chap. 5.5"Parameter error^.

The system floppy disc delivered with the system is used.

This disc contains system parameters with resolver data that was valid at delivery of the robot system (according to chapter 8).

D. Specific system parameters.

Define the specific system parameters that is valid for the installation in question. Check and entering of parameters is described in chapter 5 "System parameters".

Before switching to the MOTOR ON mode, the system parameters must be checked in particular the commutating offset and the robot sync, offset, to avoid **racing and** the **risk of a breakdown.**

1. After checking the system parameters the robot can be started.
   From MOTOR OFF, as described in chapter 4.3 the robot system is switched to MOTOR ON by pressing the enabeling device on the programming unit.

2. Robot with absolute measurement has a well known absolute position if the robotis calibrated and is therefor directly ready for operation.

   Calibration is described in the service manual.

If the robot has external axes that has to be synchronized (wellknown home position) the MOTOR ON -lamp start to flash. The external axes aresynchronized by pressing the SYNC button on the programming unit.

3. The robot is ready for operation when the MOTOR ON - lamp stops flashing and the text READY is presented on the display.

Before pressing the synchronization button make sure that external axes are free **to move into the synchronizing position (home position).**

7.3
Test running (MANUAL mode)

See the Product manual chapter Safety and the Programming Manual for detailed information about operation and programming.

1. After checking the system parameters the robot can be started.
   From MOTOR OFF, as described in chapter 4.3 the robot system is switched to MOTOR ON by pressing the enabeling device.

2. Robot system with absolute measurement has a well known absolute position if the robot system is calibrated and is therefore directly ready for operation.

   Calibration is described in the service manual.

   If the system have external axes that has to be synchronized (wellknown home position) before the system is ready for operation the MOTOR ON -lamp will start to flash. The external axes are synchronized by pressing the SYNC button on the programming unit.

3. The robot is ready for operation when the MOTOR ON - lamp stops flashing and the text READY is presented on the display.

Before pressing the synchronization button make sure that external axes are free to move into the synchronizing position (home position).

Test running should be performed in a series of steps. Begin by running the robot manually through its complete working range A simple positioning program can then be test-run, instruction by instruction to begin with, and then in an automatic sequence at different speeds.

The peripheral equipment can be tested either by programming and executing instructions which activate the peripheral equipment or by simulating the corresponding signals in the peripheral equipment
Perform a systematic check that all functions in the peripheral equipment are executed as intended. A test-run of a program combining robot and peripheral equipment operations should then be performed.

The test-run is to be concluded with checks of the functions of any sensor in the system and the transmission of data over any computer link.

Check the storage of program material on diskette and its return to the robot memory.

7.4
Coupling Diagrams

Coupling Diagrams XS3/XT3

	A	B	C	D
1	ENDEVB	ENDEV-N	MOFF HOLD1A	**MOFFHOLD2**
2	MSTOP1	MSTOP 2	MOFF HOLD IB	OV
3	24V SYS	OV	EXT MODE COM1	EXT MODE COM2
4	A STOP 1	ASTOP 2	EXTAUTO 1	EXT AUTO 2
5	GSTOP1A	GSTOP2A	EXTMAN1	EXTMAN2
6	G STOP IB	GSTOP2B	EXTMANFS1	EXTMANFS2
7	G STOP IB	GSTOP2B	HOLD1	HOLD 2
8	ES1C	ES2C	HOLD 11	HOLD 21
9	ES1A	ES2A	HOLD 12	HOLD 22
10	ESTOP 1	ESTOP 2	EXT BRAKE A	SENSOR 1
11	ESTOP 1	ESTOP 2	EXT BRAKE B	SENSOR 2
12	EXTLIM1	EXTLIM2	POWER OK	SENSOR 3
13	EXTMON1A	EXTMON2A	EJANSLUTEN	OV SENSOR
14	EXTMONB	MON2B	OV	OV
15	24VI/O	24 V I/O	OV	OV
16	24 V I/O	24VI/O	24VI/O	OV

XS3

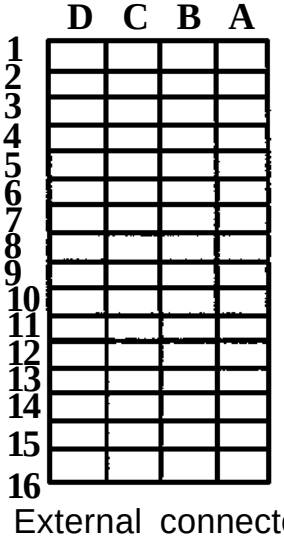

External connector

XT3

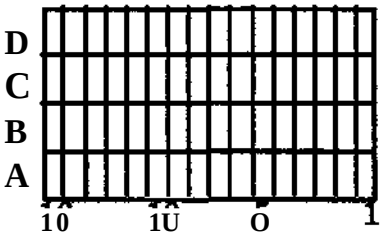

Screw terminal

Note: Signal identity corresponds to Circuit Diagram, Control system pages 6 - 9 (Service Manual S3) Future information of safety chains is found in chapter 3.4

8
SYSTEM DISK

Each robot is delivered with a system disk, 3HAB 2030-1 with the following files:

1. System parameters, for the robot at delivery date.

2. Two blocks of error codes in plain language.

   Block 0 = English
   Block 3 = Swedish

3. Test programs for running the robot to its calibration positions.

   Block 10 = test program without external axis.
   Block 20 = test program with external axis.

8.1
Robot system parameters

The system parameters with resolverdata, and option installed at delivery date, are stored on the system disk.

8.2
Error codes in plain language

The function ERROR CODES in plain language provides more information to the operator in case of system errors. These are shown on the optional monitor or on the programming unit when the"*" buttons is pressed.
The texts are stored as ordinary comment instructions and should be loaded into their designated memory area at robot installation.

8.2.1
Loading the error codes

Function
Loads the plain language error codes to their designated memory area from a diskette. First, insert the disk in the disk drive unit.

Menu
MANUELL + ERROR CODES + FROM FS

Resulting question
BLOCK **NO.=**

8.2.2
Changing the texts

The block with the texts consist of ordinary comment instructions, and may be handled as any ordinary program (see the Programming Manual).

Changing when running Off Line
To change the text program, the off-line system must be able to handle the instruction numbers since these numbers are used to locate the correct texts (see the Error code table).

Changing via terminal connected to a printer
Load the block into the ordinary user memory and edit the comment instructions via the terminal, if required. Note that the instruction numbers are used to locate the correct texts (see the Error code table).

Minor changes via the programming unit
Load the block into the ordinary user memory and edit the comment instructions via the terminal, if required. Characters A-Z may be used and no more than 24 characters may be entered.

Rules

- Division of words via the programming unit is done after the last space or hyphen of the line or after the 37th position if none of the mentioned characters can be found among the last ten characters of the line.

- An axis number is stated in the error code for some of the error messages, e.g, 506 SERVO ERROR 2 1403.
  If the plain language text ends with AXIS #1, the axis number replaces the #1.

In case of resolver errors, the fine or coarse resolver is indicated by stating 1-12 for the fine resolver and 13-24 for the coarse. If the plain language text ends with AXIS #2, the axis number replaces the #2. After #2, an additional text FINE for 1-12 and COARSE for 13-24 is shown.

Example:
506-1402 SERVO. JAM ERROR. AXIS 2
506-1215 SERVO. RESOLVER ERROR CHANNEL Y AXIS 3 COARSE

The additional texts FINE and COARSE are stored along with the rest of the plain language texts with instruction numbers 5090 and 5091 respectively.

- Redundant text may be removed if the designated memory area is getting full. Most of the text instructions 4130-4660 are identical to the original texts and may thus be erased without any information loss.
  Unless a Vision system is connected to the robot, instructions 300-490 and 6200-6240 may also be erased.

Requirements

- All comment instructions must be gathered in one file.

- The memory may be compressed using the function button RESET under the MANUAL menu.

- The program must not occupy more than 25% of the user memory area, i.e. FREE MEMORY ≥75%.

- The comment instructions must be numbered according to the Error code table.

• No other program must be present in the block.

Storing the block on a disk
After changing the text, the file is to be stored on a disk. The file may later be restored from the disk to the memory area.

Testing the changed texts
In addition to the tests automatically carried out when the texts are downloaded to the designated memory area, the following tests are to be carried out:
1. Print a list of the complete program.
2. Check that the first and last text and a few texts in between can be shown on the screen and programming unit by selecting texts with MANUAL + ERROR CODES + TEXT.
3. Check the division of words in the revised texts on the programming unit and mark in the printed list where the division is done.

&2.3
Selecting text via instruction numbers

In the Error code table the instruction numbers to be used for specific error codes are given.
504 PROGRAM RUN ERROR is missing, since the error code in this case is calculated according to: Instr. no. = 10 * error code. The table is scanned from the top and downwards, and the first hit represents the wanted instruction number. When scanning, the numbers marked with an F are not tested.

Example:
DC.W $ 506, $14FF, 5140

This line represent hits for the error codes:

506 SERVO ERROR 2 1400 to
506 SERVO ERROR 2 1499

but only the error codes 1401 to 1412 are used. 5140 is the instruction number.

If a text is shared by more than one comment instruction, the instruction numbers are increased by one since...

The Error code table is a direct excerpt from the file where the table is stored in the S3 system which explains the characters DC.W and $ (To make sure that the information is correct).

8.3
Test programs

The test programs for running the robot to its calibration positions are used to verify that the robot calibration is correct (also see the description of the system parameter Synchronization position).

The programs are:

2000 for IRB 2000, calibration position 0	6000 for IRB 6000/2.4-100 calib.pos.	0
2001 for IRB 2000, calibration position 1	6001 for IRB 6000/2.4-100	1
2002 for IRB 2000, calibration position 2	6002 for IRB 6000/2.4-100	2
2003 for IRB 2000, calibration position 3	6100 for IRB 6000/2.4-150	0
2004 for IRB 2000, calibration position 4	6101 for IRB 6000/2.4-150	1
2005 for IRB 2000, calibration position 5	6102 for IRB 6000/2.4-150	2
3000 for IRB 3000, calibration position 0	6200 for IRB 6000/2.8-100	0
3001 for IRB 3000, calibration position 1	6201 for IRB 6000/2.8-100	1
3002 for IRB 3000, calibration position 2	6202 for IRB 6000/2.8-100	2
3003 for IRB 3000, calibration position 3	6300 for IRB 6000/3.0-75	0
3004 for IRB 3000, calibration position 4	6301 for IRB 6000/3.0-75	1
3005 for IRB 3000, calibration position 5	6302 for IRB 6000/3.0-75	2
3200 for IRB 3200, calibration position 0	6400 for IRB 6000/S 3.0-100	0
3200 for IRB 3200, calibration position 1	6401 for IRB 6000/S 3.0-100	1
3200 for IRB 3200, calibration position 2	6402 for IRB 6000/S 3.0-100	2
3200 for IRB 3200, calibration position 3	6500 for IRB 6000/2.4-120	0
3200 for IRB 3200, calibration position 4	6501 for IRB 6000/2.4-120	1
3200 for IRB 3200, calibration position 5	6502 for IRB 6000/2.4-120	2
	6600 for IRB 6000/2.25PE-75	0
	6601 for IRB 6000/2.25PE-75	1
	6652 for IRB 6000/2.25PE-75	2

NOTE:
Block 10 = test program without external axis.
Block 20 = test program with external axis.

```
*************************************************************
        TTL     INO_TPL
        PAGE
*
*
*     ! TABLE over errormessage-number, code and          !
*     !  instruktion-number for the texts in RAM_TPL      !
*     !  Exception,                                       !
*     !  for ( 504 PROGRAM RUN ERROR  1-299 ) is the      !
*     !  instruktion-number = code-number * 10 (10-2990) !
*
*     $Message-number,$code,inst-no   (   error message      code)
*
*
INO_TPL: DC.W      $01,$0010,3000      (1 NOT ALLOWED COMMAND   10)
         DC.W      $01,$FFFF,3010      (1 NOT ALLOWED COMMAND     )
         DC.W      $03,$FFFF,3030      (3 DATA ERROR )
         DC.W      $04,$FFFF,3040      (4 INSTR NOT FOUND )
         DC.W      $05,$FFFF,3050      (5 PROGRAM MISSING )
         DC.W      $06,$FFFF,3060      (6 MEMORY FILLED UP )
         DC.W      $07,$FFFF,3070      (7 PROGRAM END )
         DC.W      $08,$FFFF,3080      (8 PROGRAM NUMBER OCCUPIED )
         DC.W      $09,$FFFF,3090      (9 INSTRUCTION NUMBER OVERFLOW )
*
         DC.W      $10,$0001,3110      (10 ADAPTIVITY ERROR      1)
         DC.W      $10,$0002,3120      (10 ADAPTIVITY ERROR      2)
         DC.W      $10,$0003,3130      (10 ADAPTIVITY ERROR      3)
         DC.W      $10,$0004,3140      (10 ADAPTIVITY ERROR      4)
         DC.W      $10,$0006,3160      (10 ADAPTIVITY ERROR      6)
         DC.W      $10,$0007,3170      (10 ADAPTIVITY ERROR      7)
         DC.W      $10,$0008,3180      (10 ADAPTIVITY ERROR      8)
*
         DC.W      $11,$0000,3220      (11 OUTSIDE WORKING AREA )     *
         DC.W      $11,$0014,3240      (11 OUTSIDE WORKING AREA   14) Lasertrak
         DC.W      $11,$0020,3270      (11 OUTSIDE WORKING AREA   20)
         DC.W      $11,$0023,3230      (11 OUTSIDE WORKING AREA   23)
         DC.W      $11,$0099,3250      (11 OUTSIDE WORKING AREA   99) *
         DC.W      $ll,$00FF,3260      (11 OUTSIDE WORKING AREA   xx) *
*
         DC.W      $13,$FFFF,4130      (13 ROBOT NOT SYNCRONIZED )
         DC.W      $14,$FFFF,4140      (14 AUTO MODE /KEY LOCK )
         DC.W      $15,$FFFF,4150      (15 SENSOR NOT DEFINED )
         DC.W      $16,$FFFF,4160      (16 SENSOR TYPE NOT ALLOWED )
         DC.W      $17,$FFFF,4170      (17 WRONG INSTRUCTION TYPE )
         DC.W      $18,$FFFF,4180      (18 INSTRUCTION NUMBER OCCUPIED )
         DC.W      $19,$FFFF,4190      (19 PROGRAM START )
         DC.W      $20,$FFFF,4200      (20 SELECT ROBOT CORDINATES )
         DC.W      $21,$FFFF,4210      (21 TCP NOT DEFINED )
         DC.W      $23,$FFFF,4230      (23 ALIGN ERROR )
         DC.W      $24,$FFFF,4240      (24 NOT DEFINED )
         DC.W      $25,$FFFF,4250      (25 INCOMPATIBLE OPTION )
*
         DC.W      $26,$0001,3310      (26 NOT ALLOWED/ FIXED TCP  1)
         DC.W      $26,$0002,3320      (26 NOT ALLOWED/ FIXED TCP  2) *
         DC.W      $26,$0003,3330      (26 NOT ALLOWED/ FIXED TCP  3)
         DC.W      $26,$0004,3340      (26 NOT ALLOWED/ FIXED TCP  4)
         DC.W      $26,$0005,3350      (26 NOT ALLOWED/ FIXED TCP  5)
         DC.W      $26,$0006,3360      (26 NOT ALLOWED/ FIXED TCP  6)
         DC.W      $26,$0007,3320      (26 NOT ALLOWED/ FIXED TCP  7) *
         DC.W      $26,$0008,3380      (26 NOT ALLOWED/ FIXED TCP  8)
*
         DC.W      $27,$FFFF,3500      (27 WARNING: WRONG INSTRUCTION )
*
         DC.W      $30,$FFFF,7130      (30 EXTERNAL AXES ALIGNED)
```

```
DC.W    $31,$FFFF,7140      (31 GEARRATIO NOT DEFINED)
DC.W    $32,$0001,7150      (32 CALIBRATION ERROR 1)
DC.W    $32,$0002,7160      (32 CALIBRATION ERROR 2)
DC.W    $32,$0003,717Q      (32 CALIBRATION ERROR 3)
DC.W    $33,$0001,7180      (33 NOT ALLOWED / EXTFRAME 1)
DC.W    $33,$0002,7190      (33 NOT ALLOWED / EXTFRAME 2)
DC.W    $33,$0004,7200      (33 NOT ALLOWED / EXTFRAME 4)
DC.W    $33,$0005,7210      (33 NOT ALLOWED / EXTFRAME 5)
DC.W    $33,$0007,7220      (33 NOT ALLOWED / EXTFRAME 7)
DC.W    $33,$0008,7230      (33 NOT ALLOWED / EXTFRAME 8)
*
DC.W    $501,$FFFF,5010     (501 PARAM. MEMORY FAULT,RELOAD )
DC.W    $502,$FFFF,5020     (502 PROGRAM MEMORY FAULT       )
DC.W    $503,$0001,5030     (503 EMERGENCY STOP          01)
DC.W    $503,$0002,5040     (503 WORKING AREA STOP       02)
*          (For 504 PROGRAM RUN ERROR is inst-no - 10 * code)
DC.W    $505,$FFFF,5050     (505 SERVO ERROR 1         8001) *
*
*                    5090   (FINE)   Tilläggstexter till 506-
*                    5091   (COARSE) 11FF,12FF,20FF och 22FF
*
DC.W    $506,$11FF,5110     (506 SERVO ERROR 2       llxx)
DC.W    $506,$12FF,5120     (506 SERVO ERROR 2       12xx)
DC.W    $506,$13FF,5130     (506 SERVO ERROR 2       13xx)
DC.W    $506,$14FF,5140     (506 SERVO ERROR 2       14xx)
DC.W    $506,$15FF,5150     (506 SERVO ERROR 2       15xx)
DC.W    $506,$16FF,5160     (506 SERVO ERROR 2       16xx)
DC.W    $506,$17FF,5170     (506 SERVO ERROR 2       17xx)
DC.W    $506,$18FF,5180     (506 SERVO ERROR 2       18xx)

DC.W    $506,$20FF,5200     (506 SERVO ERROR 2       20xx) *
DC.W    $506,$21FF,5210     (506 SERVO ERROR 2       21xx)
DC.W    $506,$22FF,5200     (506 SERVO ERROR 2       22xx) *
DC.W    $506,$23FF,5220     (506 SERVO ERROR 2       23xx) *
DC.V    $506,$240F,5230     (506 SERVO ERROR 2       240x) *
DC.W    $506,$5104,5300     (506 SERVO ERROR 2       5104)
DC.W    $506,$5150,5060     (506 SERVO ERROR 2       5150)
DC.W    $506,$51FF,5050     (506 SERVO ERROR 2       51xx) *
DC.W    $506,$70FF,5050     (506 SERVO ERROR 2       70xx) *
DC.W    $506,$80FF,5050     (506 SERVO ERROR 2       80xx) *
DC.W    $506,$9000,5310     (506 SERVO ERROR 2       9000)
*
DC.W    $507,$0001,5400     (507 JOYSTICK ERROR      1)
DC.W    $507,$0002,5410     (507 JOYSTICK ERROR      2)
*
DC.W    $508,$0006,5460     (508 DISK MEMORY FAULT     6)
DC.W    $508,$000F,5440     (508 DISK MEMORY FAULT     x)
DC.W    $508,$0010,5470     (508 DISK MEMORY FAULT    10)
DC.W    $508,$0020,5500     (508 DISK MEMORY FAULT    20)
DC.W    $508,$0021,5510     (508 DISK MEMORY FAULT    21)
DC.W    $508,$0022,5530     (508 DISK MEMORY FAULT    22) *
DC.W    $508,$0024,5530     (508 DISK MEMORY FAULT    24)
DC.W    $508,$0026,5560     (508 DISK MEMORY FAULT    26) *
DC.W    $508,$0027,5570     (508 DISK MEMORY FAULT    27)
DC.W    $508,$0028,5580     (508 DISK MEMORY FAULT    28)
DC.W    $508,$0029,5590     (508 DISK MEMORY FAULT    29)
DC.W    $508,$0030,5600     (508 DISK MEMORY FAULT    30)
DC.W    $508,$0031,5610     (508 DISK MEMORY FAULT    31)
DC.W    $508,$0032,5620     (508 DISK MEMORY FAULT    32)
*
DC.W    $509,$0000,5800     (509 SYNC ERROR             ) *
DC.W    $509,$0016,5760     (509 SYNC ERROR           16)
DC.W    $509,$0017,5770     (509 SYNC ERROR           17)
DC.W    $509,$1029,3230     (509 SYNC ERROR         1029)
DC.W    $509,$10FF,3260     (509 SYNC ERROR         l0xx) *
```

```
DC.W    $509,$11FF,5710    (509 SYNC ERROR          llxx)
DC.W    $509,$14FF,5740    (509 SYNC ERROR          14xx)
DC.W    $509,$15FF,5750    (509 SYNC ERROR          15xx)
DC.W    $509,$20FF,3260    (509 SYNC ERROR          20xx) *
DC.W    $509,$21FF,5790    (509 SYNC ERROR          21xx)
DC.W    $509,$22FF,5780    (509 SYNC ERROR          22xx)
DC.W    $509,$23FF,5220    (509 SYNC ERROR          23xx)
DC.W    $509,$FFFF,5800    (509 SYNC ERROR               ) *
*
DC.W    $510,$0003,3250    (510 SYSTEM ERROR           3) *
DC.W    $510,$0004,5840    (510 SYSTEM ERROR           4) *
DC.W    $510,$0005,5840    (510 SYSTEM ERROR           5) *
DC.W    $510,$0006,5860    (510 SYSTEM ERROR           6)
*
DC.W    $513,$FFFF,6000    (513 WRONGLY PLACED I/O BOARD XXX)
DC.W    $514,$0001,6010    (514 COMMUNICATION ERROR    1)
DC.W    $514,$0002,6020    (514 COMMUNICATION ERROR    2)
DC.W    $514,$0003,6030    (514 COMMUNICATION ERROR    3)
DC.W    $514,$0004,6040    (514 COMMUNICATION ERROR    4)
DC.W    $514,$0005,6050    (514 COMMUNICATION ERROR    5)
DC.W    $514,$0006,6060    (514 COMMUNICATION ERROR    6)
DC.W    $514,$0008,6080    (514 COMMUNICATION ERROR    8)
DC.W    $514,$0009,6090    (514 COMMUNICATION ERROR    9) *
*
DC.W    $514,$0010,6090    (514 COMMUNICATION ERROR   10) *
DC.W    $514,$0011,6110    (514 COMMUNICATION ERROR   U)
DC.W    $514,$0012,6120    (514 COMMUNICATION ERROR   12)
DC.W    $514,$0013,6130    (514 COMMUNICATION ERROR   13)
DC.W    $514,$0014,6140    (514 COMMUNICATION ERROR   14)
*
DC.W    $514,$0020,6200    (514 COMMUNICATION ERROR   20)
DC.W    $514,$0021,6090    (514 COMMUNICATION ERROR   21) *
DC.W    $514,$0022,6220    (514 COMMUNICATION ERROR   22) *
DC.W    $514,$0023,6220    (514 COMMUNICATION ERROR   23) *
DC.W    $514,$0024,6240    (514 COMMUNICATION ERROR   24)
DC.W    $514,$0026,6250    (514 COMMUNICATION ERROR   26)
*
DC.W    $515,$FFFF,6300    (515 TIMEOUT ERROR           )
DC.W    $516,$0001,6310    (516 OVERRIDE ERROR         1)
DC.W    $516,$0002,6320    (516 OVERRIDE ERROR         2)
DC.W    $517,$1010,6330    (517 WELD ERROR          1010)
DC.W    $517,$1020,6340    (517 WELD ERROR          1020)
DC.W    $517,$2010,6350    (517 WELD ERROR          2010)
DC.W    $517,$2020,6360    (517 WELD ERROR          2020)
DC.W    $523,$0002,6420    (523 COMMON DRIVE UNIT ERROR 2)
DC.W    $523,$0003,6430    (523 COMMON DRIVE UNIT ERROR 3)
DC.W    $523,$0004,6440    (523 COMMON DRIVE UNIT ERROR 4)
DC.W    $523,$0004,6450    (523 COMMON DRIVE UNIT ERROR 5)
DC.W    $523,$0004,6460    (523 COMMON DRIVE UNIT ERROR 6)
DC.W    $536,$0001,4330    (536 DMH FAULT)
DC.W    $536,$0005,4340    (536 SPEED SUPERVISION FAULT)
DC.W    $536,$0013,4350    (536 RUN RELAY FAULT)
DC.W    $536,$0021,4360    (536 ENABLE CHAIN FAULT)
DC.W    $536,$0034,4370    (536 COMM OFFSET NOT DEFINED)
DC.W    $536,$0035,4380    (536 RUN BUTTON FAULT)
DC.W    $536,$0036,4660    (536 KEY STATUS FAULT)
DC.W    $536,$01FF,4630    (536 MOTOR OVERLOAD FAULT XX)
DC.W    $538,$0001,4390    (538 WORK STOP)
DC.W    $538,$0002,4400    (538 SAFETY STOP)
DC.W    $539,$0001,4410    (539 INTERNAL RECTIFIER POWER FAULT)
DC.W    $539,$0002,4420    (539 EXTERNAL RECTIFIER POWER FAULT)
DC.W    $539,$0003,4430    (539 WARNING/ RECTIFIER PHASE MISSING)
*
DC.W    $540,$FFFF,4440    (540 BRAKES RELAY FAULT )
DC.W    $542,$FFFF,6720    (542 MOTOR TYPE NOT DEFINED   )
```

```
DC.W    $543,$0011,4460    (543 SYNRONIZE 11) Lasertrak *
DC.W    $543,$0012,4460    (543 SYNRONIZE 12) Lasertrak *
DC.W    $543,$0013,6890    (543 SYNRONIZE 13) Lasertrak
DC.W    $543,$0015,6900    (543 SYNRONIZE 15) Lasertrak *
DC.W    $543,$0016,6900    (543 SYNRONIZE 16) Lasertrak *
DC.W    $543,$0017,6900    (543 SYNRONIZE 17) Lasertrak *
DC.W    $544,$0030,6930    (544 SEAM NOT FOUND 30)
DC.W    $544,$0031,6940    (544 SEAM NOT FOUND 31)
DC.W    $544,$0040,6950    (544 TRACK ERROR 40)
DC.W    $544,$0041,6960    (544 TRACK ERROR 41)
DC.W    $544,$0042,6970    (544 TRACK ERROR 42)
DC.W    $544,$0043,6980    (544 TRACK ERRPR 43)
DC.W    $544,$0044,6990    (544 TRACK ERROR 44)
DC.W    $545,$0002,7000    (545 CALIBRATION ERROR 2)  «
DC.W    $545,$0013,7010    (545 CALIBRATION ERROR 13)
DC.W    $545,$0045,7020    (545 CALIBRATION ERROR 45)  *
DC.W    $545,$0046,3220    (545 CALIBRATION ERROR 46)  *
DC.W    $545,$0047,7040    (545 CALIBRATION ERROR 47)
DC.W    $545,$0048,7110    (545 CALIBRATION ERROR 48)
DC.W    $545,$0049,7120    (545 CALIBRATION ERROR 49)
DC.W    $545,$0050,7050    (545 CALIBRATION ERROR 50)
DC.W    $545,$0051,7060    (545 CALIBRATION ERROR 51)
DC.W    $545,$0053,7070    (545 CALIBRATION ERROR 53)
DC.W    $545,$0060,7080    (545 CALIBRATION ERROR 60)
DC.W    $547,$FFFF,6770    (547 HYDRAULIC PRESSURE ERROR)
DC.W    $548,$FFFF,6780    (548 ENABLE TWO CHAIN FAULT)
*
DC.W    $550,$0001,6810    (550 WELD ERROR            1)
DC.W    $550,$0002,6820    (550 WELD ERROR            2)
DC.W    $551,$FFFF,6830    (551 WELD ERROR TIMER       )
DC.W    $552,$FFFF,6840    (552 WELD ERROR CURRENT     )
DC.W    $553,$FFFF,6850    (553 WELD ERROR FLOW        )
DC.W    $554,$FFFF,6860    (554 WELD ERROR TEMP        )
DC.W    $555,$FFFF,6870    (555 WELD ERROR ENABLE MOVE  )
DC.W    $567,$FFFF,4470    (567 ERROR / SAFETY BOARD)
DC.W    $570,$FFFF,4480    (570 ERROR/ MEASURE SYSTEM AXES 1-6)
DC.W    $571,$FFFF,4490    (571 ERROR/ MEASURE SYSTEM AXIS 7)
DC.W    $572,$FFFF,4500    (572 ERROR/ MEASURE SYSTEM AXES 8-12)
DC.W    $573,$FFFF,4510    (573 ERROR/ MEASURE SYSTEM AXES 7-12)
DC.W    $589,$FFFF,4520    (589 RECTIFIER MISSING)
DC.W    $590,$FFFF,4530    (590 RECTIFIER WRONG TYPE)
DC.W    $591,$FFFF,4540    (591 DRIVE SYSTEM ERROR)
DC.W    $592,$FFFF,4550    (592 RECTIFIER OUTPUT VOLTAGE HIGH)
DC.W    $593,$FFFF,4560    (593 RECTIFIER TEMP. HIGH)
DC.W    $594,$FFFF,4570    (594 SHUNT RESISTANCE TEMP. HIGH)
DC.W    $595,$FFFF,4580    (595 DRIVE UNIT MISSING)
DC.W    $596,$FFFF,4590    (596 DRIVE UNIT WRONG TYPE)
DC.W    $597,$FFFF,4600    (597 DRIVE UNIT CURRENT HIGH)
DC.W    $598,$FFFF,4610    (598 DRIVE UNIT CURRENT ERROR)
DC.W    $599,$FFFF,4620    (599 DRIVE UNIT TEMP. HIGH)
DC.W    $602,$FFFF,4640    (602 VISION SYSTEM ERROR)
DC.W    $700,$FFFF,4650    (700 WARNING NEW RESOLVER DATA LOADED)
DC.W    $4000,0,0
*
```